WURLITZER® ELECTRONIC PIANOS

Service Manual

MODELS 200 • 203 • 203W • 206 • 207 & 207V • 214 & 214V

Model 200

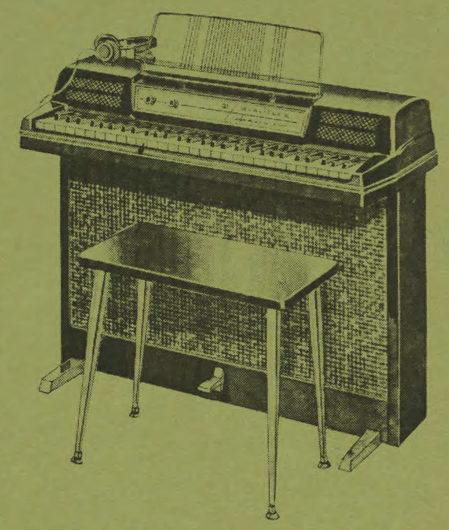

Model 203

Model 203W

Model 214 & 214V

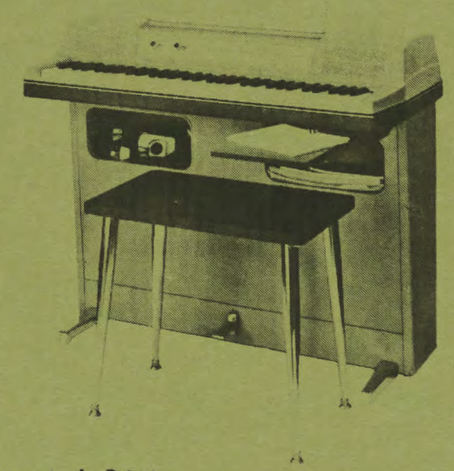

Model 206

Model 207 & 207V

DIAGRAMS & SCHEMATICS

CONTENTS

Sept. 1968

Electronic Piano Amplifier (Sept. 1968) 3
Output Signal Connections (Sept. 1968) 4

Sept. 1969

Electronic Piano Amplifier 5
Electronic Piano Amplifier PC Board 6
Output Signal Connections 7
Communication Center 8
Communication Center PC Board 9
Communication Between Instructor and A-1 Student Only 10
Communication Between Instructor and A-6 Student Only 11
Instructor to Group A, Mix C and D 12
Instructor to Group A, Audio Aid 1 to Group A, Audio Aid 3 to Group C 13
Ensemble, Group A and Instructor, Group B No Instructor 14

June 1971

Electronic Piano Amplifier 15
Electronic Piano Amplifier PC Board 16
Output Signal Connections 17

June 1973

Electronic Piano Amplifier 18
Electronic Piano Amplifier PC Board 19
Output Signal Connections 20
Communication Center 21
Instructor to Group A, Audio Aid 1 to Group A, Audio Aid 3 to Group C 22

200a Schematics

200a Electronic Piano Amplifier 23
200a PC Board & Physical Layout 24

SCHEMATIC - ELECTRONIC PIANO AMPLIFIER
MODELS 200-203-206 & 207

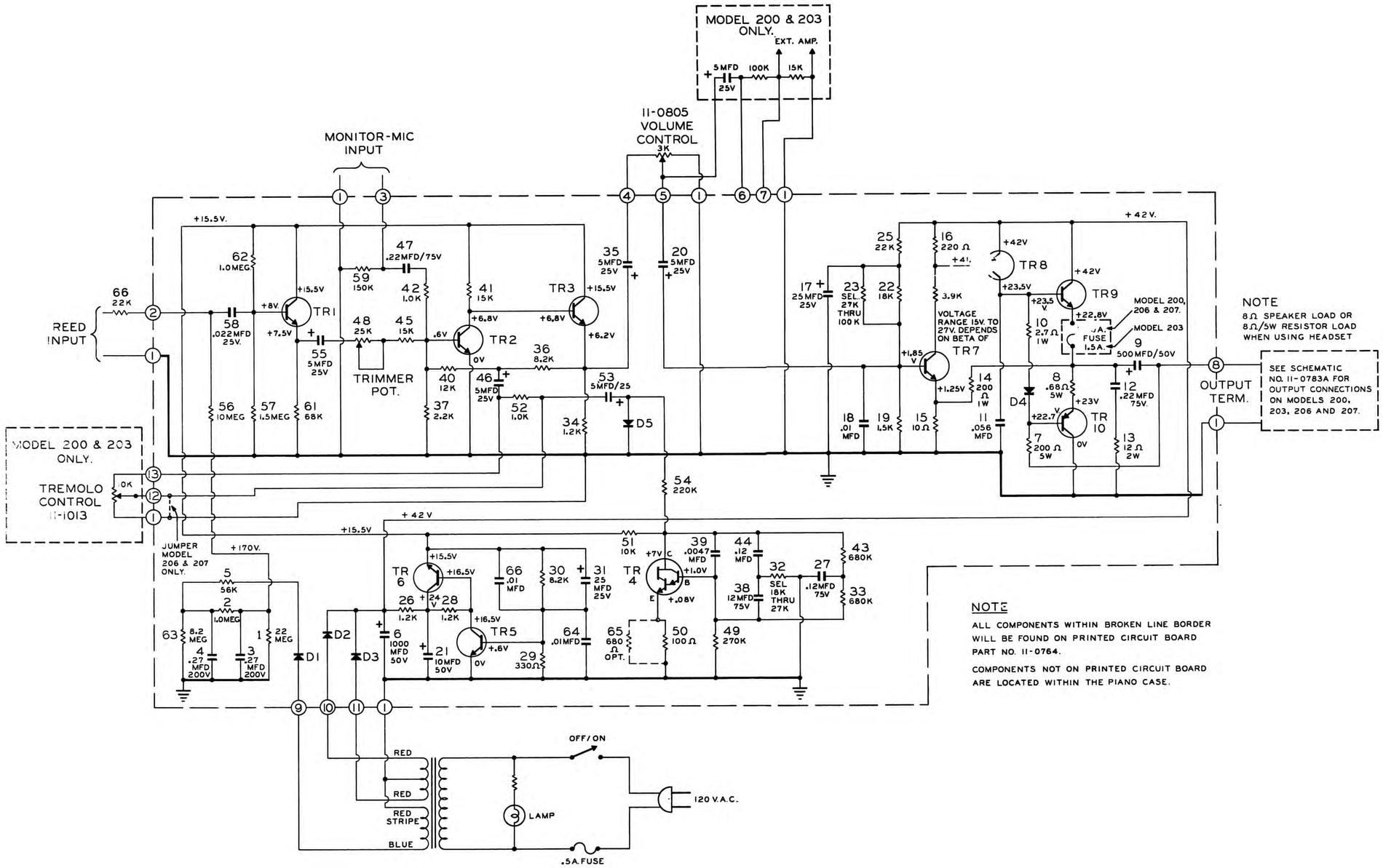

PART	NUMBER	WURLITZER PART NUMBER
TRANSISTOR	TR 1	202051
	TR 2	202052
SPECIFY DOT COLOR CODE FOR SERVICE REPLACEMENT	TR 3	202073
	TR 4	202053
	TR 5	202073
	TR 6	202073
	TR 7	202054
	TR 8	202055
	TR 9	202056
	TR 10	202057
DIODE	D 1	202050
	D 2	202050
	D 3	202050
	D 4	202050
	D 5	202049

NOTE

8Ω SPEAKER LOAD OR 8Ω/5W RESISTOR LOAD WHEN USING HEADSET

SEE SCHEMATIC NO. 11-0783A FOR OUTPUT CONNECTIONS ON MODELS 200, 203, 206 AND 207.

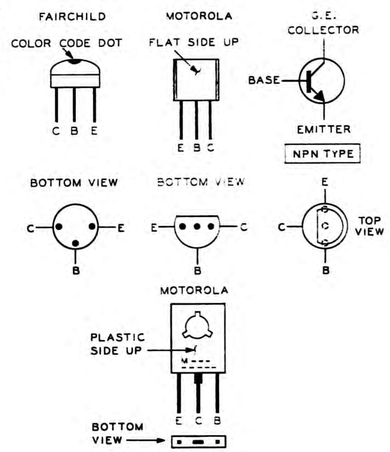

NOTE

ALL COMPONENTS WITHIN BROKEN LINE BORDER WILL BE FOUND ON PRINTED CIRCUIT BOARD PART NO. 11-0764.

COMPONENTS NOT ON PRINTED CIRCUIT BOARD ARE LOCATED WITHIN THE PIANO CASE.

NOTE

ALL D.C. VOLTAGES MEASURED WITH A VACUUM TUBE VOLTMETER, TOL. ±10% EXCEPT AS NOTED. LINE VOLTAGE 120 VOLTS. NO INPUT SIGNAL.

ALL ELECTRONIC COMPONENTS SUCH AS RESISTORS, CAPACITORS ETC. ARE IDENTIFIED WITH A NUMBER.

EXAMPLE 26 IDENTFYING NUMBER — 1.2K

THE WURLITZER COMPANY - DEKALB DIVISION - DEKALB, ILLINOIS.

MODEL - 200 - 203 - 206 - 207
TITLE - SCHEMATIC - AMPLIFIER
STARTING SERIAL NO. 200-48001 206-48601 203-48451 207-49151

PART NO. 11-0783-S-1-E-2
DATE - SEPT. 1, 1968.

tropicalfishvintage.com

OUTPUT SIGNAL CONNECTIONS
ELECTRONIC PIANO

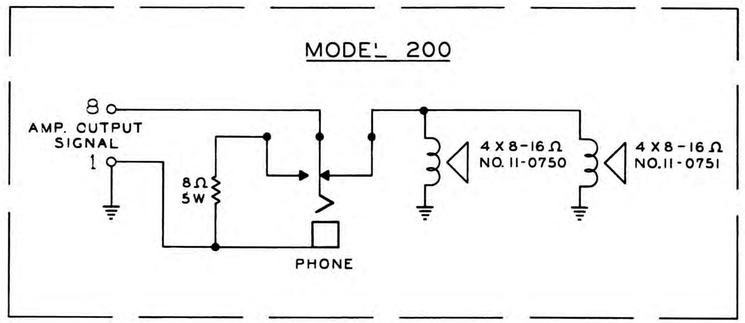

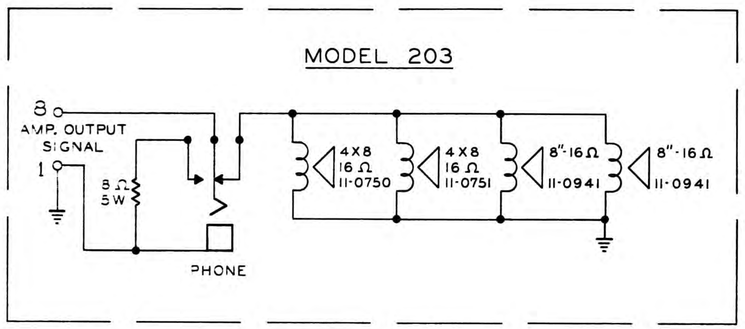

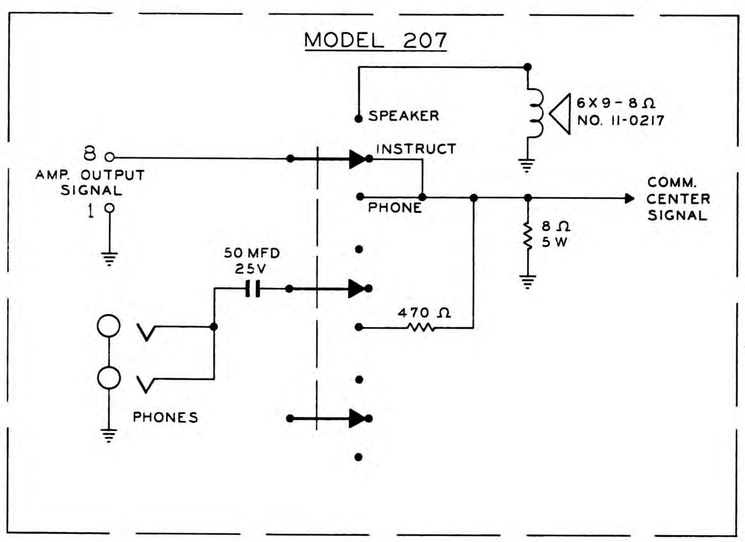

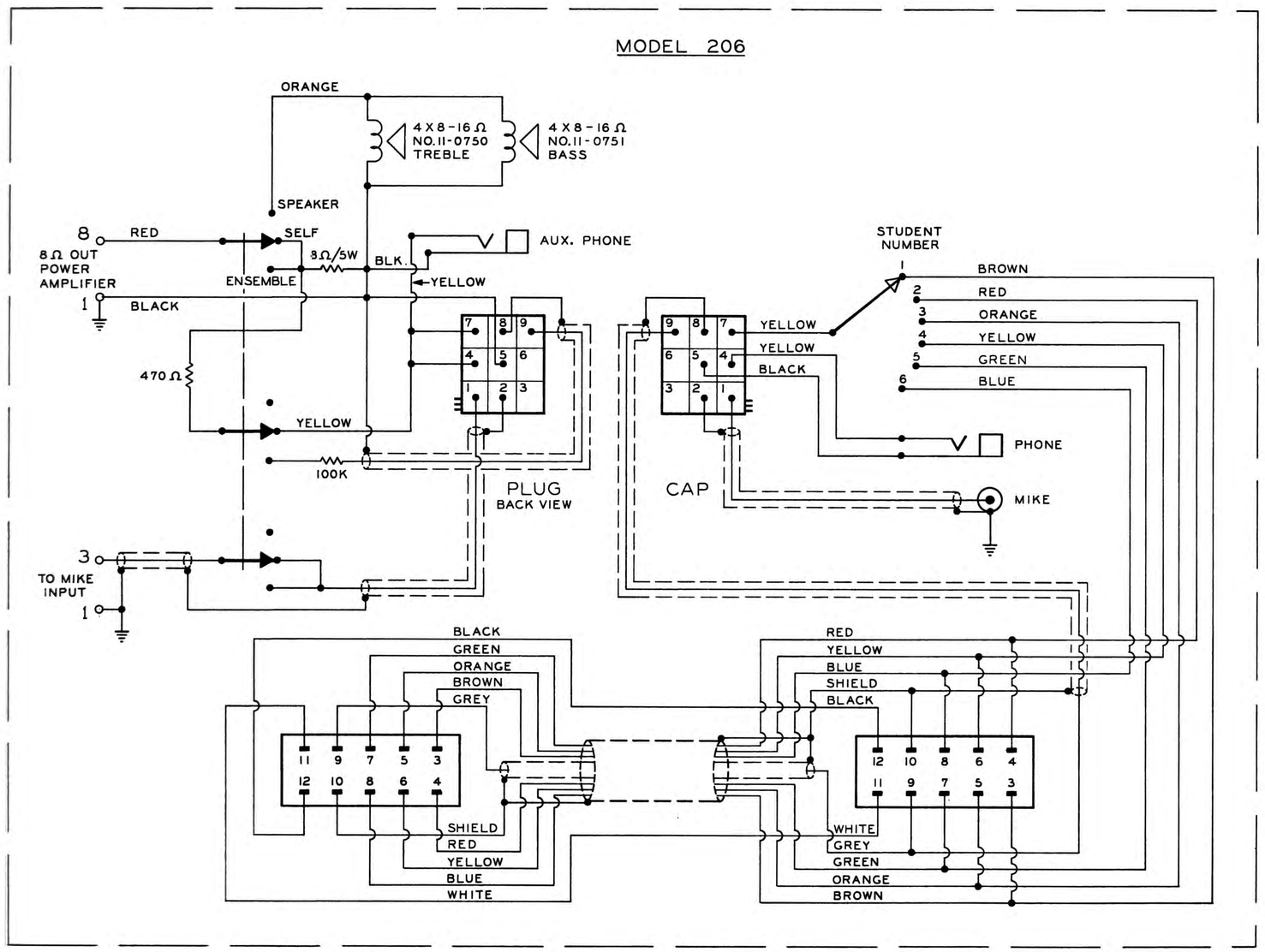

THE WURLITZER COMPANY - DEKALB DIVISION, DEKALB ILL.

MODEL - 200, 203, 206, 207.

TITLE - OUTPUT SIGNAL CONNECTIONS

STARTING SERIAL NO. 200-48001 206-48601 203-48451 207-49151

PART NO. 11-0783A

DATE - SEPT. 1, 1968

tropicalfishvintage.com

SCHEMATIC - ELECTRONIC PIANO AMPLIFIER
MODELS 200-203-206 & 207

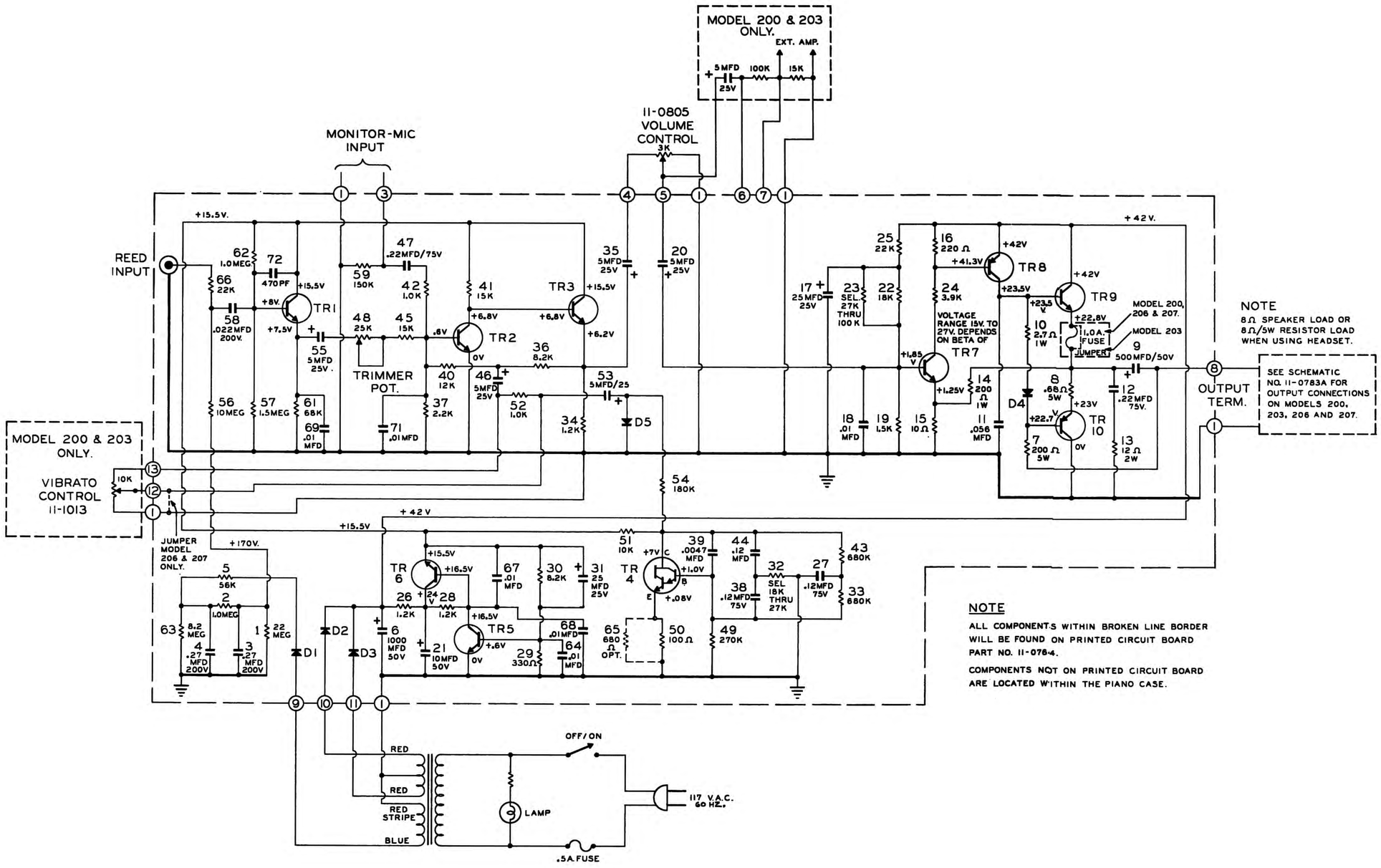

NOTE

8Ω SPEAKER LOAD OR 8Ω/5W RESISTOR LOAD WHEN USING HEADSET.

SEE SCHEMATIC NO. 11-0783A FOR OUTPUT CONNECTIONS ON MODELS 200, 203, 206 AND 207.

PART	NUMBER	WURLITZER PART NUMBER
TRANSISTOR	TR 1	202051
	TR 2	202052
SPECIFY DOT COLOR CODE FOR SERVICE REPLACEMENT	TR 3	202073
	TR 4	202053
	TR 5	202073
	TR 6	202073
	TR 7	202054
	TR 8	202055
	TR 9	202056
	TR 10	202057
DIODE	D 1	202050
	D 2	202050
	D 3	202050
	D 4	202050
	D 5	202049

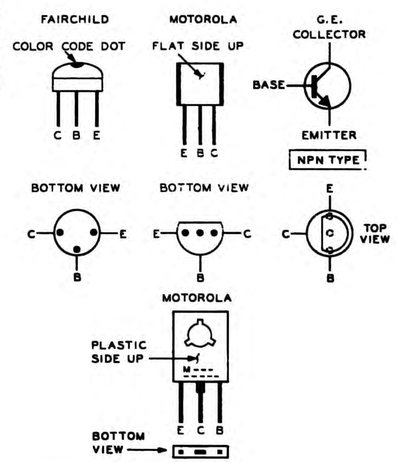

NOTE

ALL COMPONENTS WITHIN BROKEN LINE BORDER WILL BE FOUND ON PRINTED CIRCUIT BOARD PART NO. 11-0764.

COMPONENTS NOT ON PRINTED CIRCUIT BOARD ARE LOCATED WITHIN THE PIANO CASE.

NOTE

ALL D.C. VOLTAGES MEASURED WITH A VACUUM TUBE VOLTMETER, TOL. ±10% EXCEPT AS NOTED. LINE VOLTAGE 117 VOLTS. NO INPUT SIGNAL.

ALL ELECTRONIC COMPONENTS SUCH AS RESISTORS, CAPACITORS ETC. ARE IDENTIFIED WITH A NUMBER.

EXAMPLE 26 IDENTFYING NUMBER — 1.2K

THE WURLITZER COMPANY - DEKALB DIVISION - DEKALB, ILLINOIS.

MODEL - 200 - 203 - 206 - 207.

TITLE - SCHEMATIC - AMPLIFIER

STARTING SERIAL NO. 200-48001 206-48601 203-48451 207-49151

PART NO. 11-0783-S-2-E-10

DATE - SEPT. 1, 1969.

tropicalfishvintage.com

ELECTRONIC PIANO AMPLIFIER P.C. BOARD
MODELS 200-203-206 AND 207

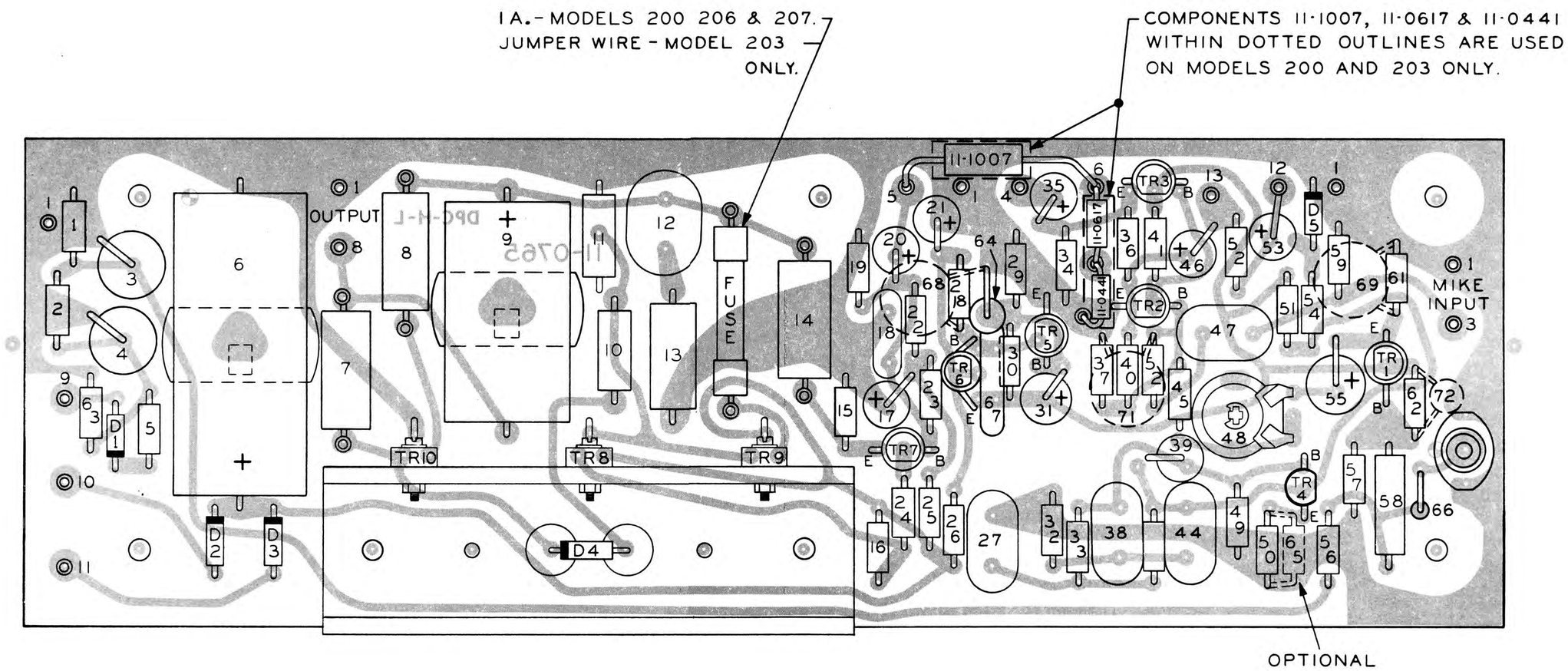

NOTE

SEE SCHEMATIC PART NO. 11-0783 FOR CONNECTIONS AND COMPLETE CIRCUIT.
NUMBERS ON COMPONENTS CORRESPOND TO NUMBERS ON SCHEMATIC 11-0783.

DIODE

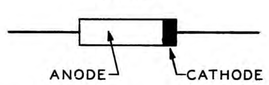

THE WURLITZER COMPANY-DEKALB DIVISION, DEKALB, ILL.

MODEL - 200-203-206-207

TITLE - P.C. BOARD - AMPLIFIER

STARTING SERIAL NO. 200-48001, 206-48601, 203-48451, 207-49151.

PART NO. 11-0764-S2E-9

DATE - SEPT. 1, 1969.

tropicalfishvintage.com

OUTPUT SIGNAL CONNECTIONS
ELECTRONIC PIANO

MODEL 200 - PORTABLE

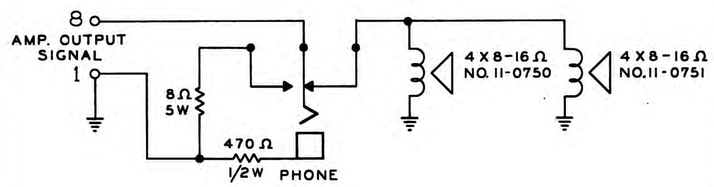

MODEL 203 - CONSOLE

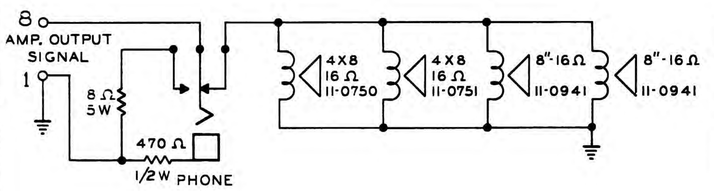

MODEL 207 - TEACHER

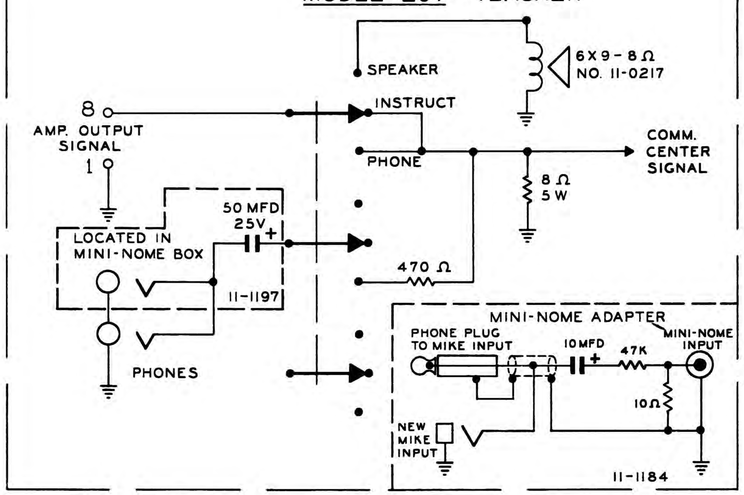

MODEL 206 - STUDENT

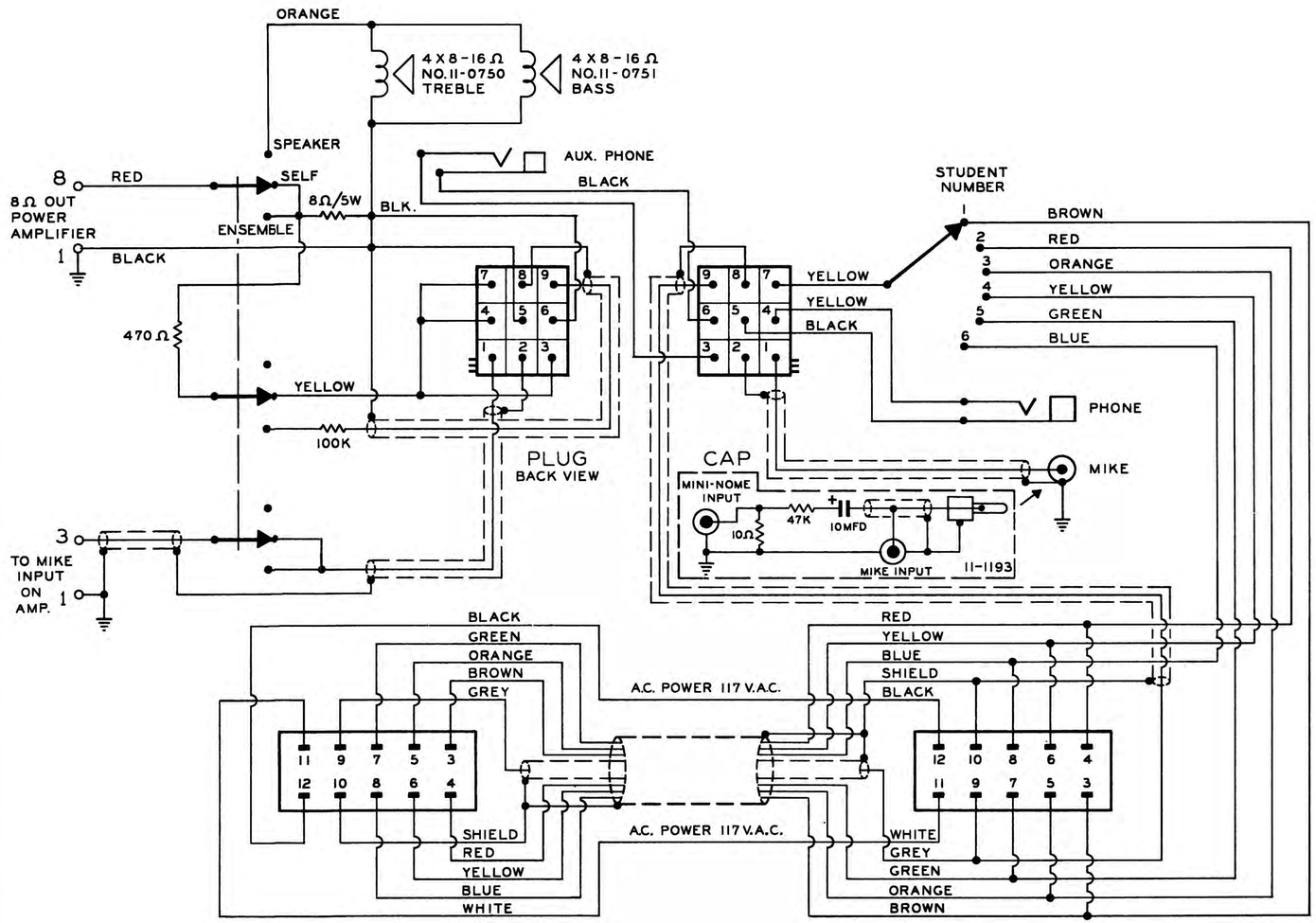

THE WURLITZER COMPANY - DEKALB DIVISION, DEKALB ILL.

MODEL - 200, 203, 206, 207.

TITLE - OUTPUT SIGNAL CONNECTIONS

STARTING SERIAL NO. 200-48001 206-48601 203-48451 207-49151

PART NO. 11-0783A-S-2

DATE - SEPT. 1, 1969.

tropicalfishvintage.com

COMMUNICATION CENTER SCHEMATIC

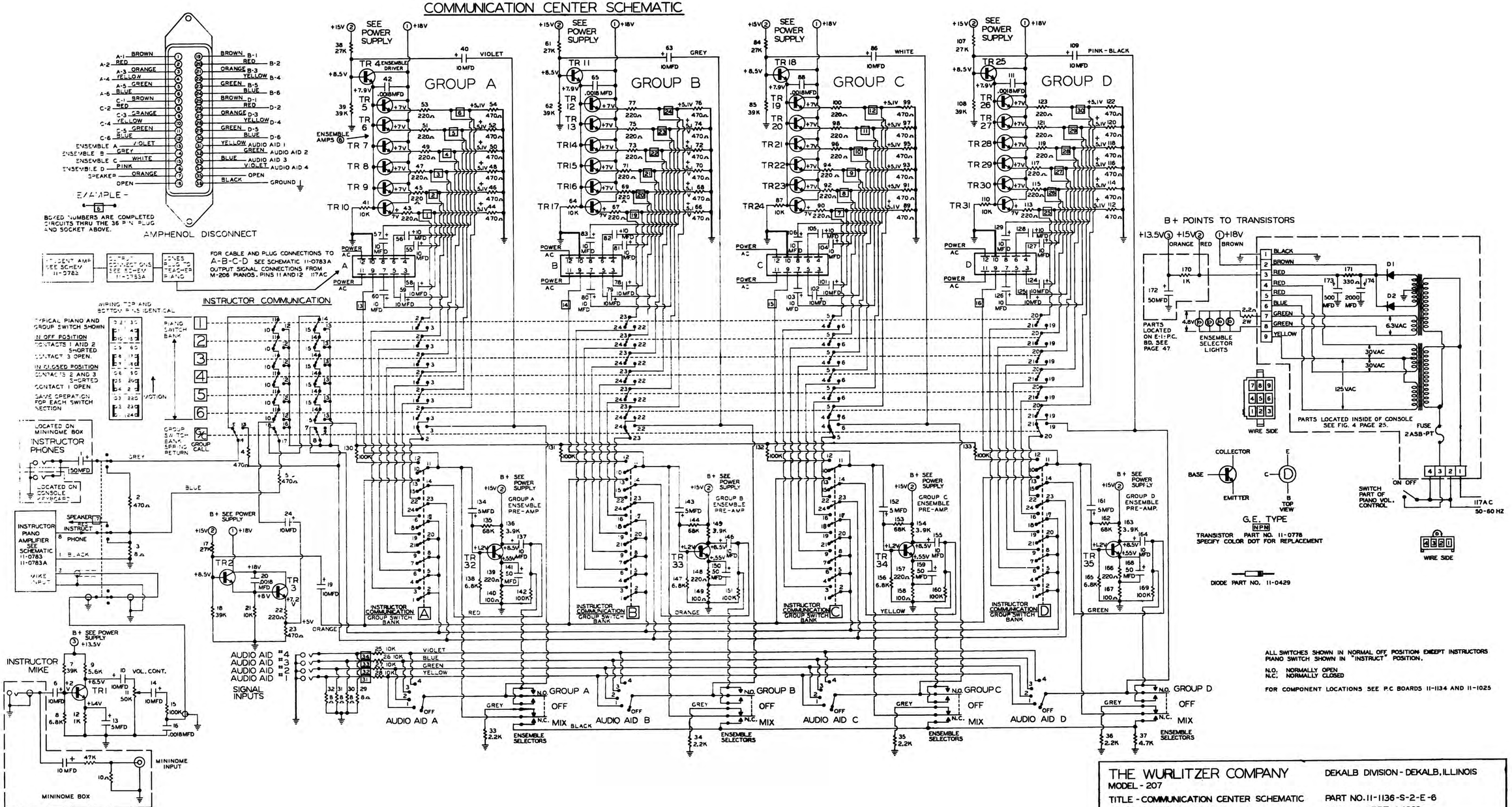

tropicalfishvintage.com

P.C. BOARD – COMMUNICATION CENTER

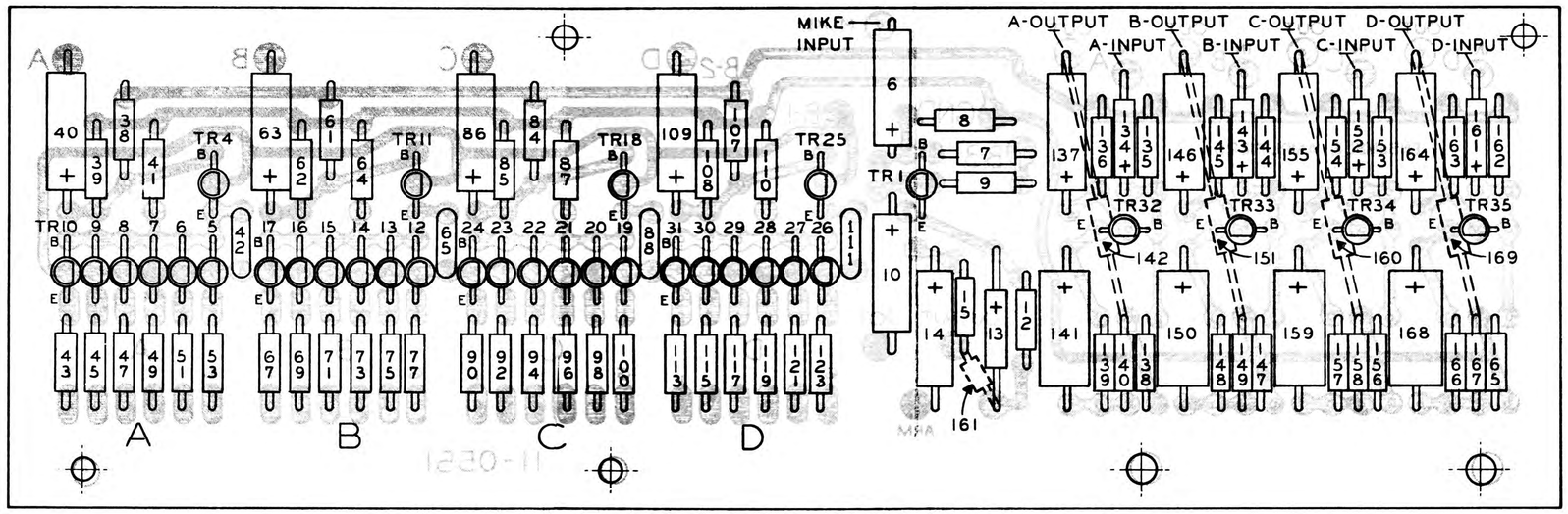

NOTE

FOR COMPLETE WIRING SEE SCHEMATIC NO. 11-1136.
DOTTED COMPONENTS ARE LOCATED ON UNDERSIDE OF P.C. BOARD.

THE WURLITZER COMPANY - DEKALB DIVISION - DEKALB, ILLINOIS

MODEL - 207 COMMUNICATION CENTER
TITLE - PRINTED CIRCUIT BOARD
STARTING SERIAL NO. 49151

PART NO. 11-1134-S-1-E-3
DATE - SEPT. 1, 1969

tropicalfishvintage.com

COMMUNICATION BETWEEN
INSTRUCTOR AND A-1
STUDENT ONLY
11-1137

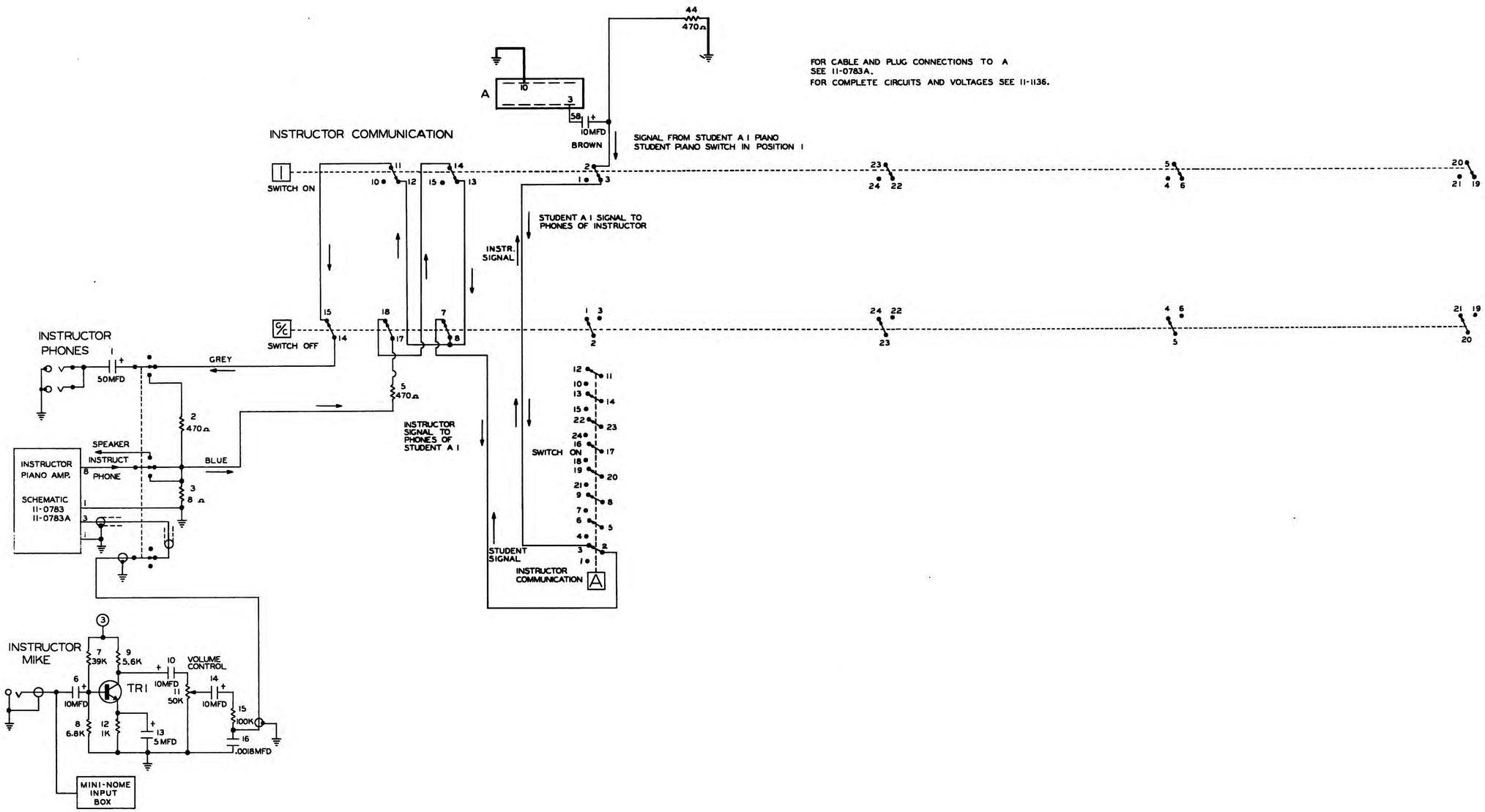

THE WURLITZER COMPANY — DEKALB DIVISION - DEKALB, ILLINOIS
MODEL - 207
TITLE - COMMUNICATION CENTER SCHEMATIC — PART NO. - 11-1137-S-2
STARTING SERIAL NO. 49151 — DATE - SEPT. 1, 1969

tropicalfishvintage.com

COMMUNICATION BETWEEN INSTRUCTOR AND A 6 STUDENT ONLY

11-1138

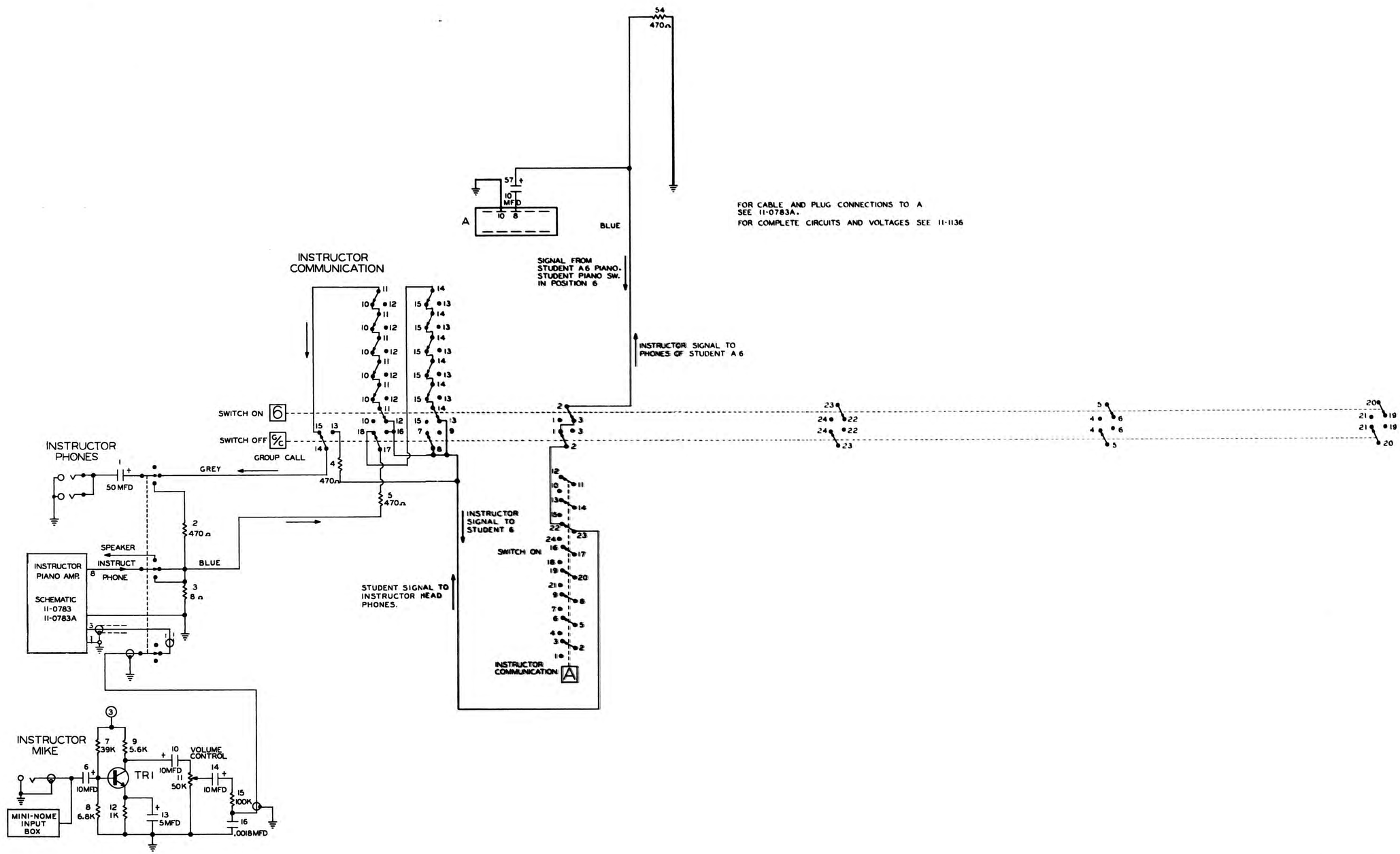

THE WURLITZER COMPANY — DEKALB DIVISION - DEKALB, ILLINOIS

MODEL - 207

TITLE - COMMUNICATION CENTER SCHEMATIC — PART NO.-11-1138-S-2

STARTING SERIAL NO. 49151 — DATE - SEPT. 1,1969

tropicalfishvintage.com

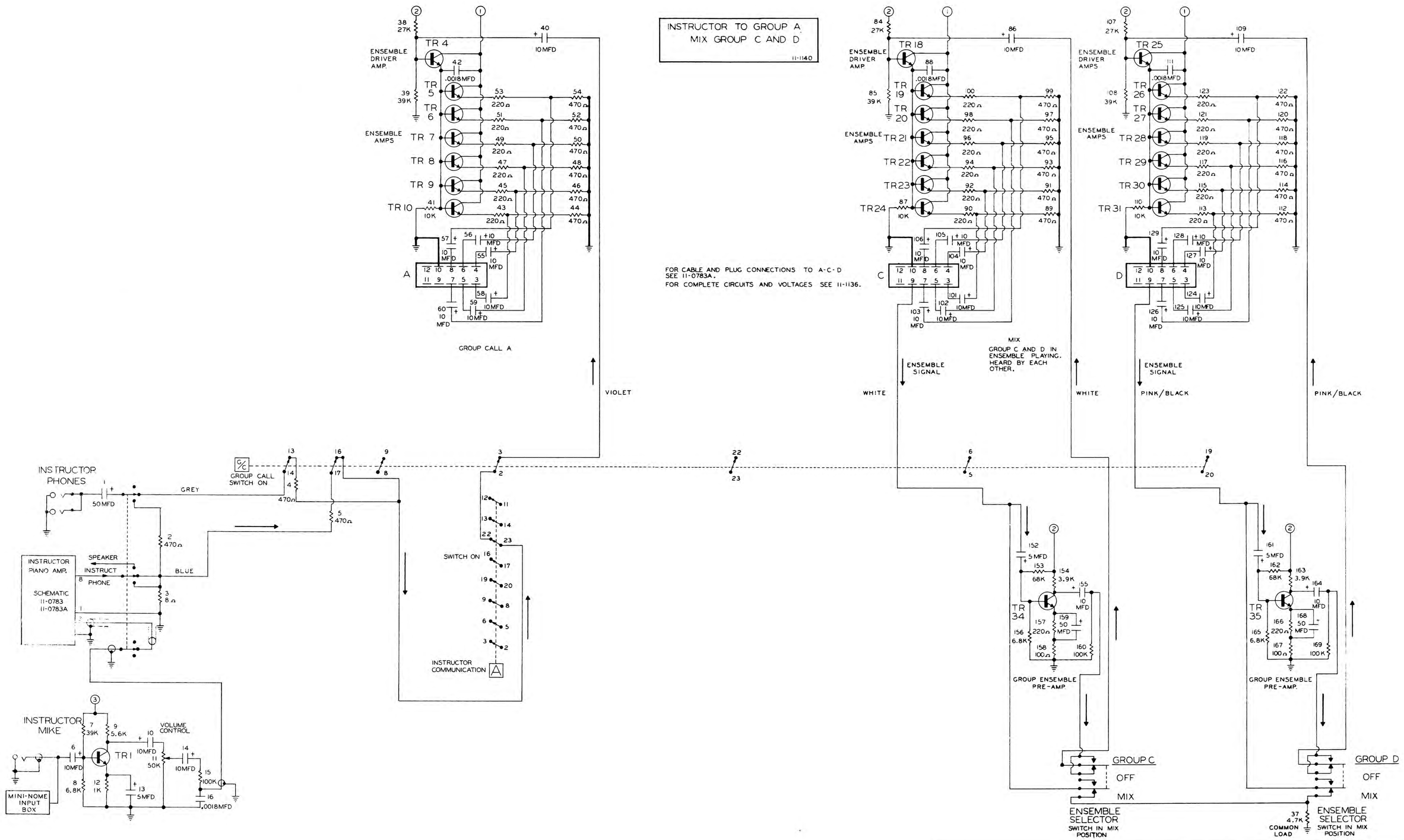

THE WURLITZER COMPANY — DEKALB DIVISION - DEKALB, ILLINOIS

MODEL - 207

TITLE - COMMUNICATION CENTER SCHEMATIC — PART NO. 11-1140-S-2

STARTING SERIAL NO. 49151 — DATE - SEPT. 1, 1969

tropicalfishvintage.com

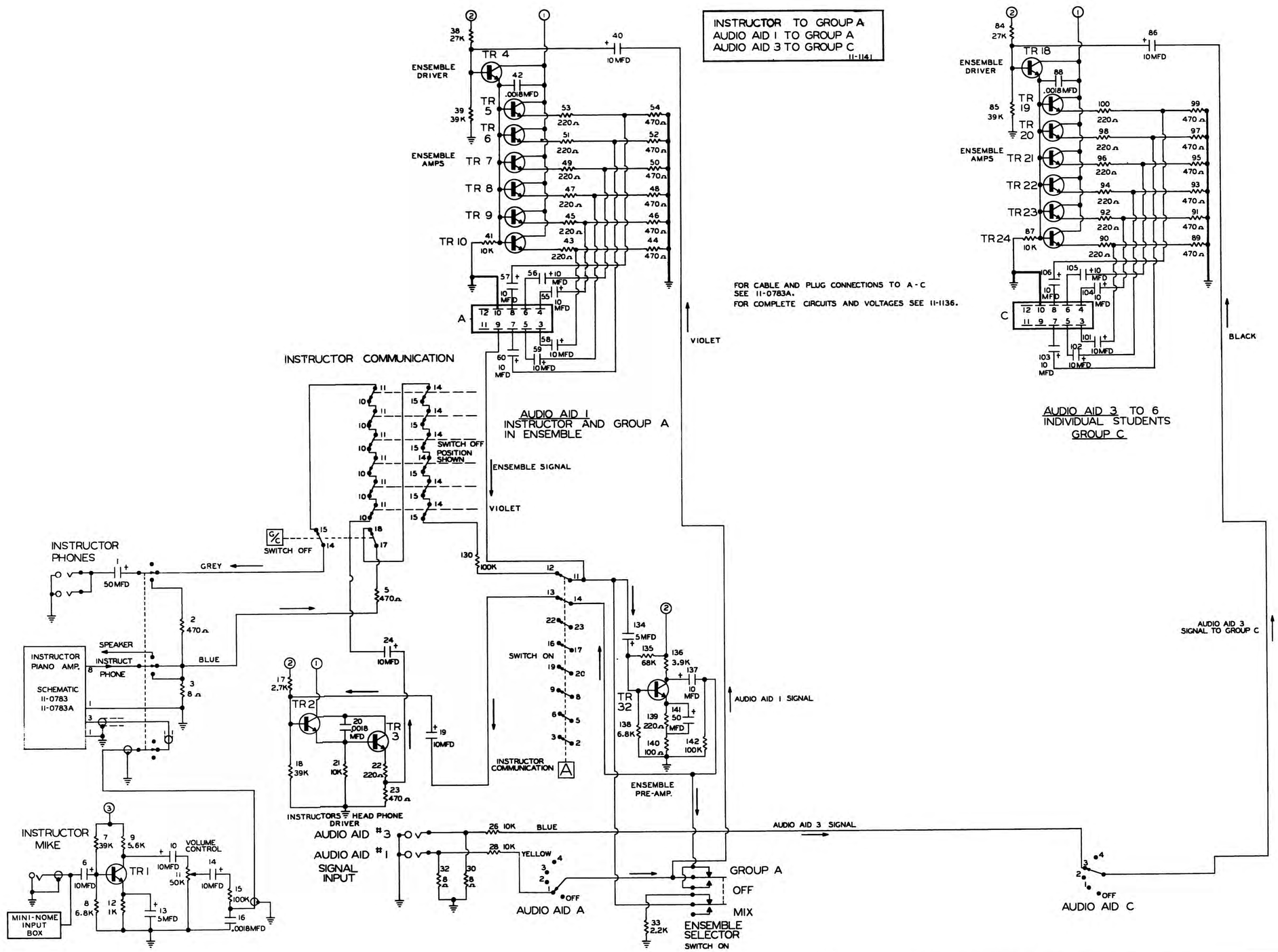

THE WURLITZER COMPANY	DEKALB DIVISION - DEKALB, ILLINOIS
MODEL - 207	
TITLE - COMMUNICATION CENTER SCHEMATIC	PART NO. 11-1141-S-2
STARTING SERIAL NO. 49151	DATE - SEPT. 1, 1969

tropicalfishvintage.com

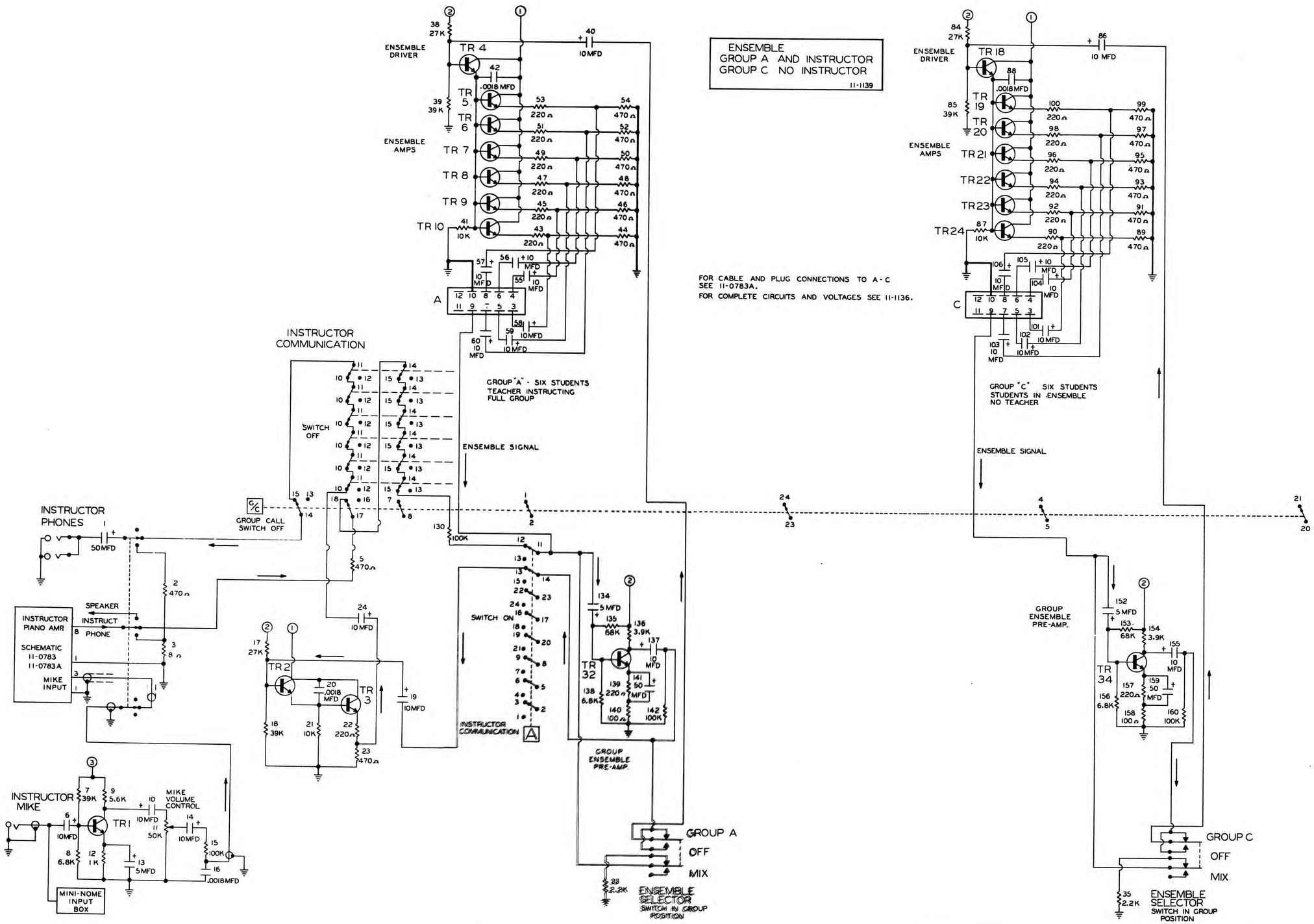

THE WURLITZER COMPANY — DEKALB DIVISION - DEKALB, ILLINOIS
MODEL - 207
TITLE - COMMUNICATION CENTER SCHEMATIC — PART NO. 11-1139-S-2
STARTING SERIAL NO. 49151 — DATE - SEPT. 1, 1969

tropicalfishvintage.com

SCHEMATIC - ELECTRONIC PIANO AMPLIFIER
MODELS 200-203-203W-207-214

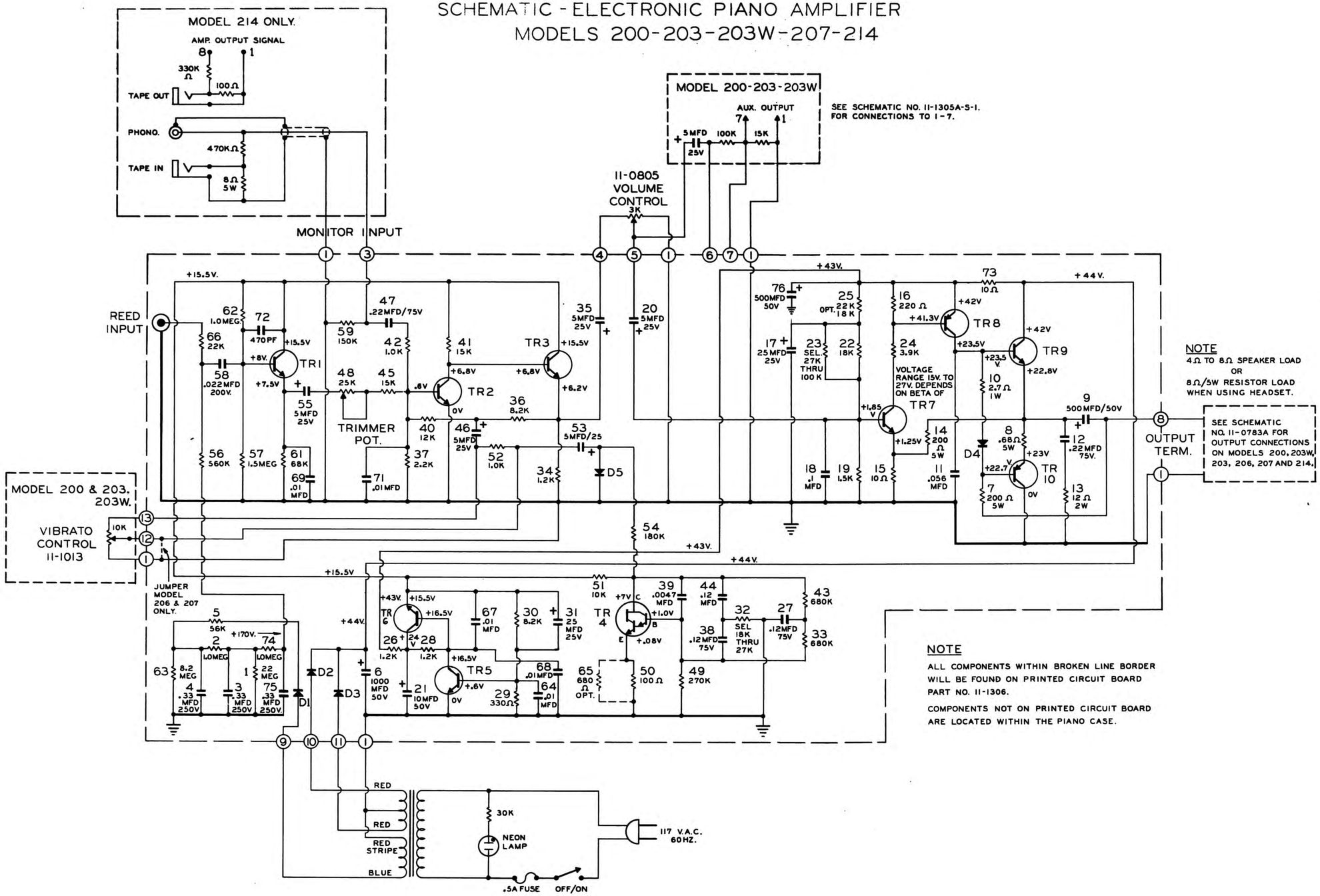

NOTE

4Ω TO 8Ω SPEAKER LOAD
OR
8Ω/5W RESISTOR LOAD
WHEN USING HEADSET.

SEE SCHEMATIC NO. 11-0783A FOR OUTPUT CONNECTIONS ON MODELS 200, 203W, 203, 206, 207 AND 214.

PART	NUMBER	WURLITZER PART NUMBER
TRANSISTOR	TR 1	11-0778
	TR 2	11-0778
SPECIFY DOT COLOR CODE FOR SERVICE REPLACEMENT	TR 3	11-0778
	TR 4	11-0775
	TR 5	11-0778
	TR 6	11-0778
	TR 7	11-0774
	TR 8	11-0770
	TR 9	11-0772
	TR 10	11-0773
DIODE	D 1	11-0769
	D 2	11-0771
	D 3	11-0771
	D 4	11-0771
	D 5	11-0781

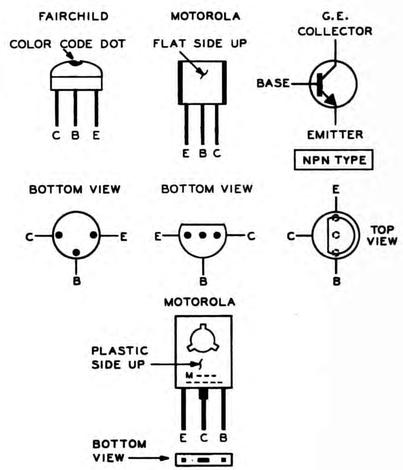

NOTE

ALL COMPONENTS WITHIN BROKEN LINE BORDER WILL BE FOUND ON PRINTED CIRCUIT BOARD PART NO. 11-1306.

COMPONENTS NOT ON PRINTED CIRCUIT BOARD ARE LOCATED WITHIN THE PIANO CASE.

NOTE

ALL D.C. VOLTAGES MEASURED WITH A VACUUM TUBE VOLTMETER, TOL. ±10% EXCEPT AS NOTED. LINE VOLTAGE 117 VOLTS. NO INPUT SIGNAL.

ALL ELECTRONIC COMPONENTS SUCH AS RESISTORS, CAPACITORS ETC. ARE IDENTIFIED WITH A NUMBER.

EXAMPLE 26 IDENTFYING NUMBER 1.2K

THE WURLITZER COMPANY - DEKALB DIVISION - DEKALB, ILLINOIS.

MODEL - 200 - 203 - 203W - 206 - 207 - 214.

TITLE - SCHEMATIC - AMPLIFIER — PART NO. 11-1305-S-1-E-3

STARTING SERIAL NO. 200-58050 | 203W-56491 | 207-55921 | 203-56403 | 206 -57144 | 214-57776 | DATE - JUNE 1, 1971.

tropicalfishvintage.com

COMPONENTS 11-1007, 11-0617 & 11-0441 WITHIN DOTTED LINES ARE USED ON MODELS 200 AND 203 ONLY.

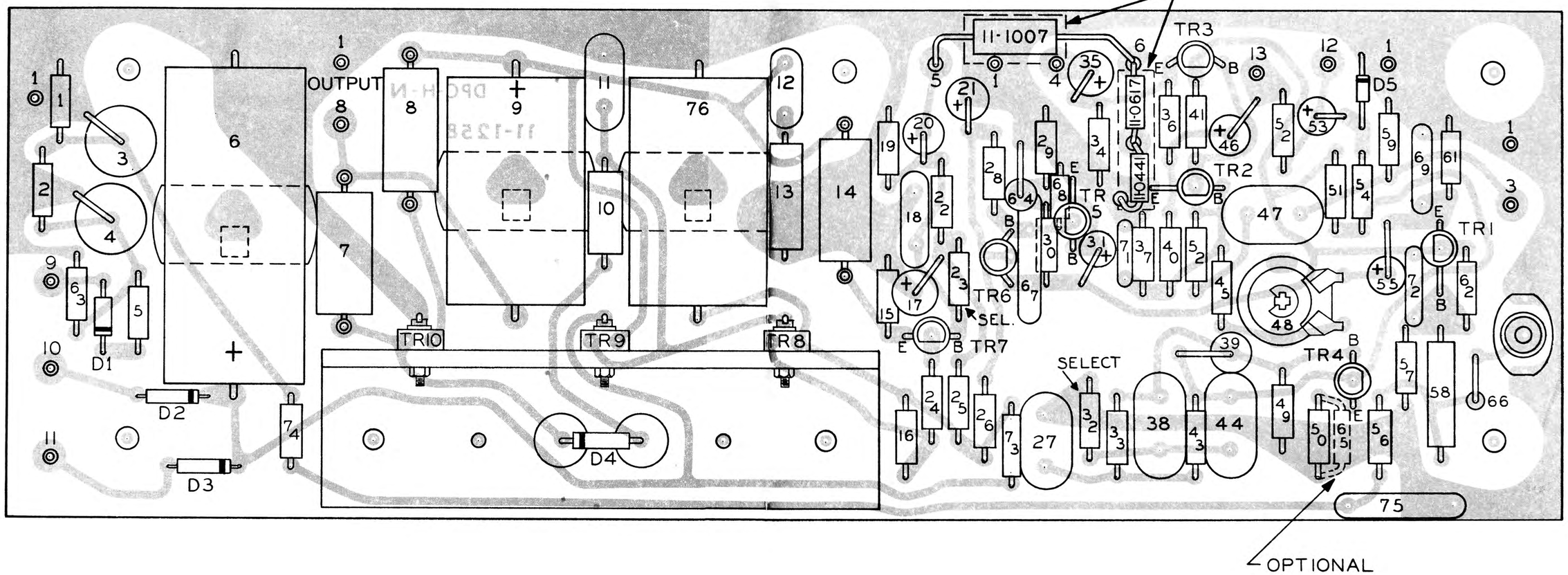

NOTE.
SEE SCHEMATIC PART NO. 11-1305 FOR CONNECTIONS AND COMPLETE CIRCUITS.
NUMBERS ON COMPONENTS CORRESPOND TO NUMBERS ON SCHEMATIC 11-1305.

DIODE

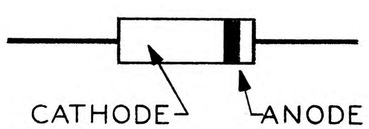

TITLE – P.C. BOARD - E.P. AMPLIFIER.
MODEL – 200 203 203W 206 207 214 PART NO. 11-1306-S-1-E-1
STARTING SERIAL NO. 58050-56403-56491 57144-55921-57776 DATE JUNE 1, 1971
THE WURLITZER COMPANY - DEKALB DIVISION - DEKALB, ILL.

OUTPUT SIGNAL CONNECTIONS
ELECTRONIC PIANO
200 SERIES

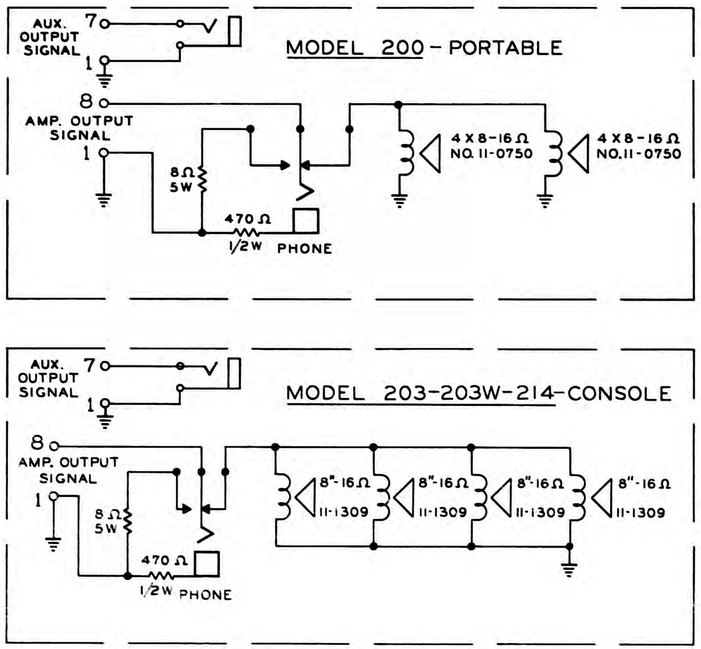

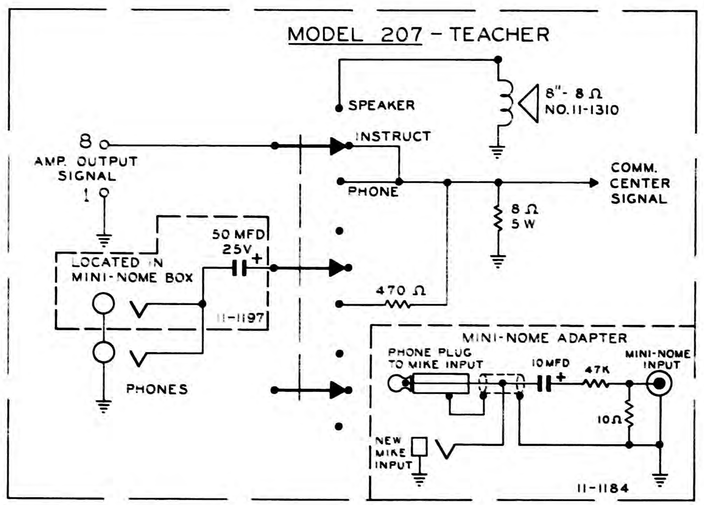

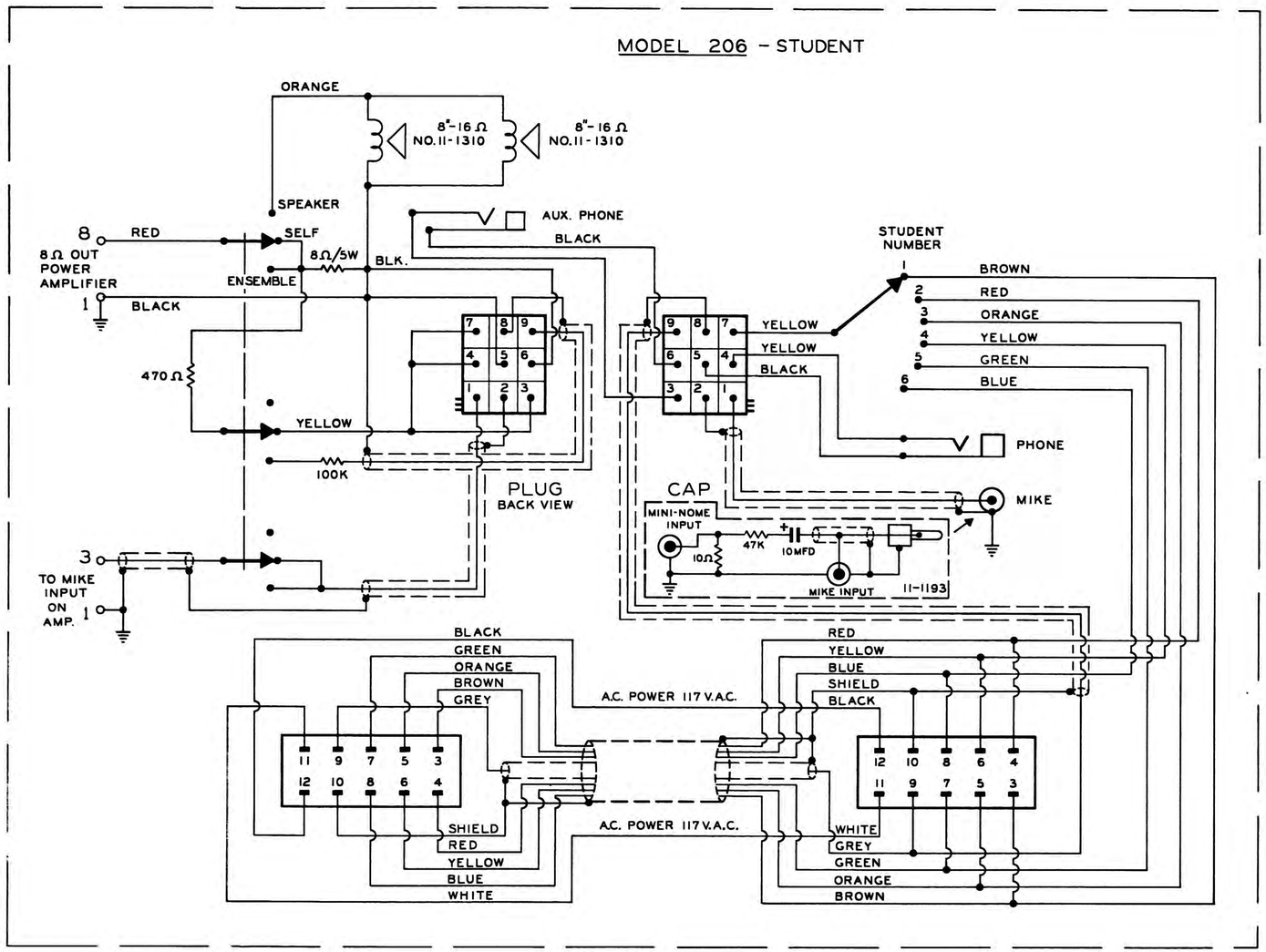

THE WURLITZER COMPANY - DEKALB DIVISION, DEKALB ILL.

MODEL - 200. 203, 203W, 206, 207, 214.

TITLE - OUTPUT SIGNAL. CONNECTIONS — PART NO. 11-1305A-S-1

STARTING SERIAL NO. 200-58050 | 203W-56491 | 207-55921 | 203 56043 | 206 -57144 | 214-57776 — DATE - JUNE 1, 1971.

tropicalfishvintage.com

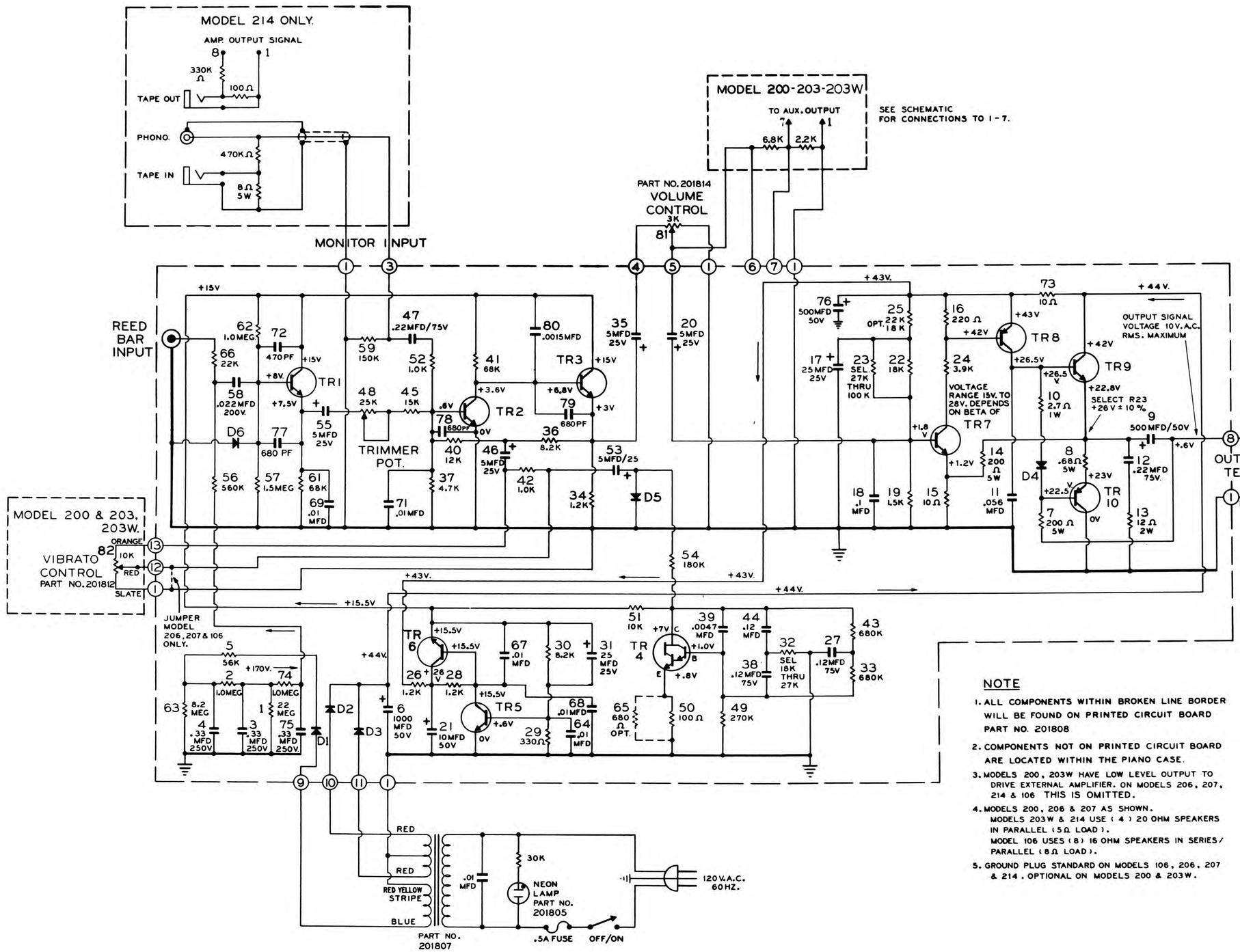

PART	NUMBER	WURLITZER PART NUMBER
TRANSISTOR	TR 1	202051
	TR 2	202052
SPECIFY DOT	TR 3	202073
COLOR CODE	TR 4	202053
FOR SERVICE	TR 5	202073
REPLACEMENT	TR 6	202073
	TR 7	202054
	TR 8	202055
	TR 9	202056
	TR 10	202057
DIODE	D 1	202050
	D 2	202050
	D 3	202050
	D 4	202050
	D 5	202049
	D 6	202049

NOTE

USE 5 Ω / 5W RESISTOR LOAD WHEN CHECKING OUTPUT STAGE VOLTAGES.

TRANSISTOR BASING

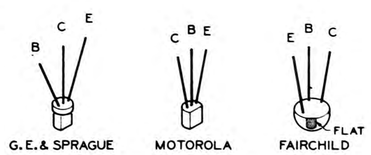

NOTE

1. ALL COMPONENTS WITHIN BROKEN LINE BORDER WILL BE FOUND ON PRINTED CIRCUIT BOARD PART NO. 201808
2. COMPONENTS NOT ON PRINTED CIRCUIT BOARD ARE LOCATED WITHIN THE PIANO CASE.
3. MODELS 200, 203W HAVE LOW LEVEL OUTPUT TO DRIVE EXTERNAL AMPLIFIER. ON MODELS 206, 207, 214 & 106 THIS IS OMITTED.
4. MODELS 200, 206 & 207 AS SHOWN. MODELS 203W & 214 USE (4) 20 OHM SPEAKERS IN PARALLEL (5 Ω LOAD). MODEL 106 USES (8) 16 OHM SPEAKERS IN SERIES / PARALLEL (8 Ω LOAD).
5. GROUND PLUG STANDARD ON MODELS 106, 206, 207 & 214. OPTIONAL ON MODELS 200 & 203W.

NOTE

ALL D.C. VOLTAGES MEASURED WITH A HIGH IMPEDANCE VOLTMETER, TOL. ±10% EXCEPT AS NOTED.
LINE VOLTAGE 120V. 60HZ. NO INPUT SIGNAL

ALL ELECTRONIC COMPONENTS SUCH AS RESISTORS, CAPACITORS ETC. ARE IDENTIFIED WITH A NUMBER.

EXAMPLE 26 IDENTFYING NUMBER 1.2K

MODEL- 200 SERIES PART NO.- 201904-S-1-E-1
TITLE- ELECTRONIC PIANO AMPLIFIER SCHEMATIC
STARTING SERIAL NO.- M-200-73257 M-203-73414 M-214-73397 DATE- 6-1-73
THE WURLITZER COMPANY - DEKALB DIVISION - DEKALB, ILL.

tropicalfishvintage.com

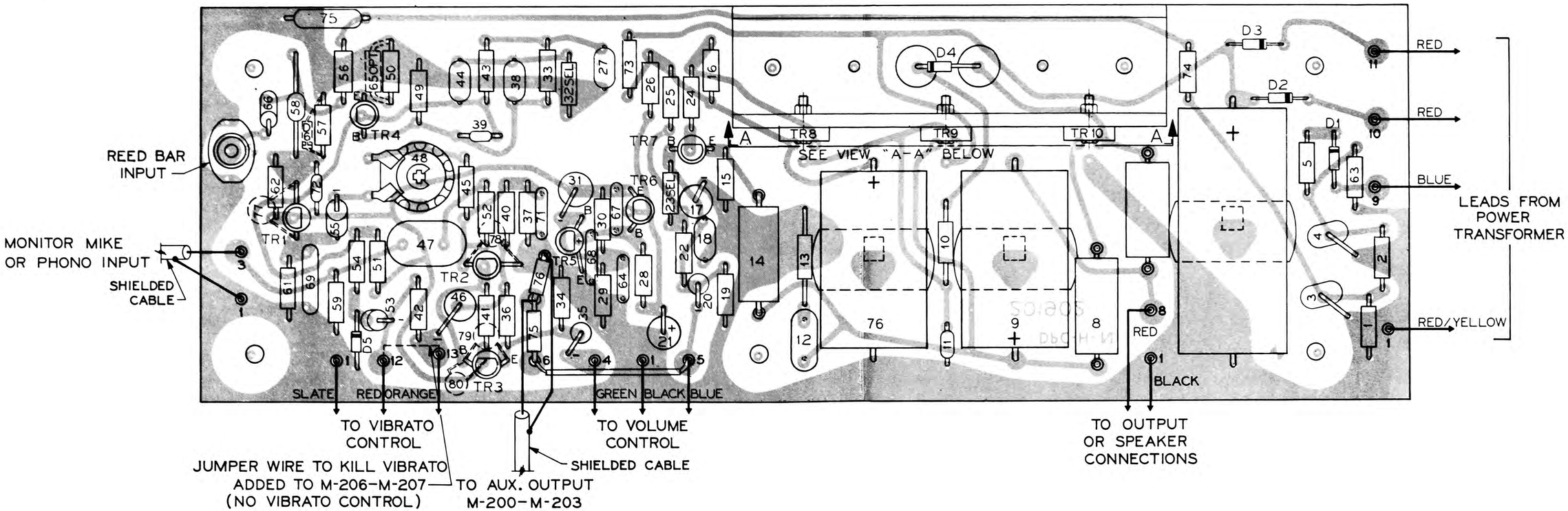

TORQUE – USE NO MORE THAN 6 IN. LBS. TO SECURE TR8, TR9 & TR10

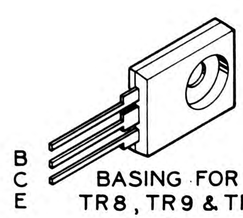

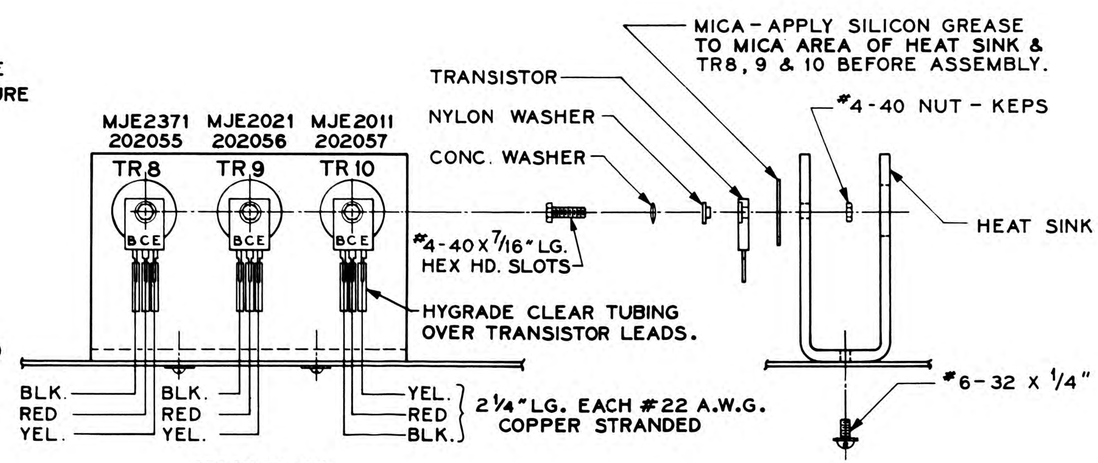

VIEW "A-A"

TRANSISTOR INSTALLATION TO HEAT SINK
VIEWED FROM TRANSISTOR SIDE

NOTES -

SEE SCHEMATIC 201904D FOR CONNECTIONS AND COMPLETE CIRCUITS.

NUMBERS ON COMPONENTS CORRESPOND TO NUMBERS ON SCHEMATIC 201904D.

BAND INDICATES CATHODE END OF DIODE.

PARTS # 75 (6.8K - 1/2 W) & # 76 (2.2K 1/2W) TO BE ASSEMBLED ON MODELS 200 & 203W FOR LOW LEVEL OUTPUT TO DRIVE EXTERNAL AMPLIFIER FROM AUX. OUTPUT

MODEL - 200 SERIES PART NO - 201808-S-1-E-1
TITLE - AMPLIFIER - PIANO - P.C. BD. ASSEM.
M-200-73257
STARTING SERIAL NO. - M-203-73414 M-214-73397 DATE - 6-1-73
THE WURLITZER COMPANY - DEKALB DIVISION - DEKALB, ILL.

tropicalfishvintage.com

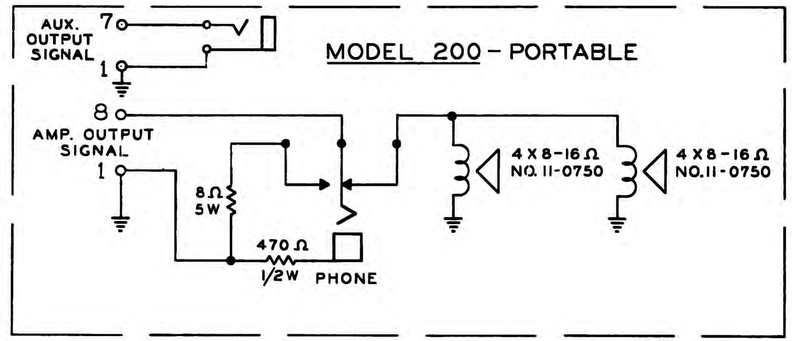

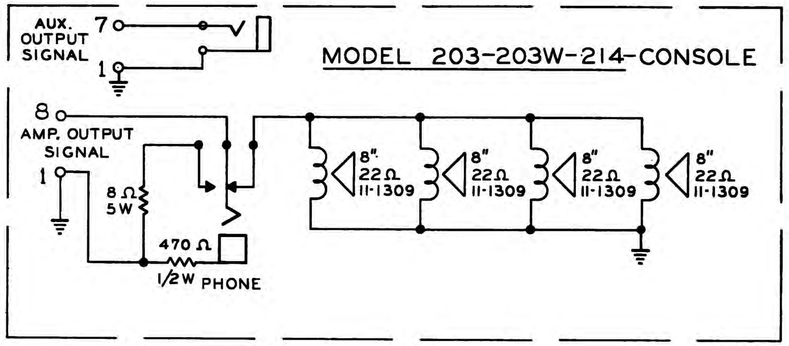

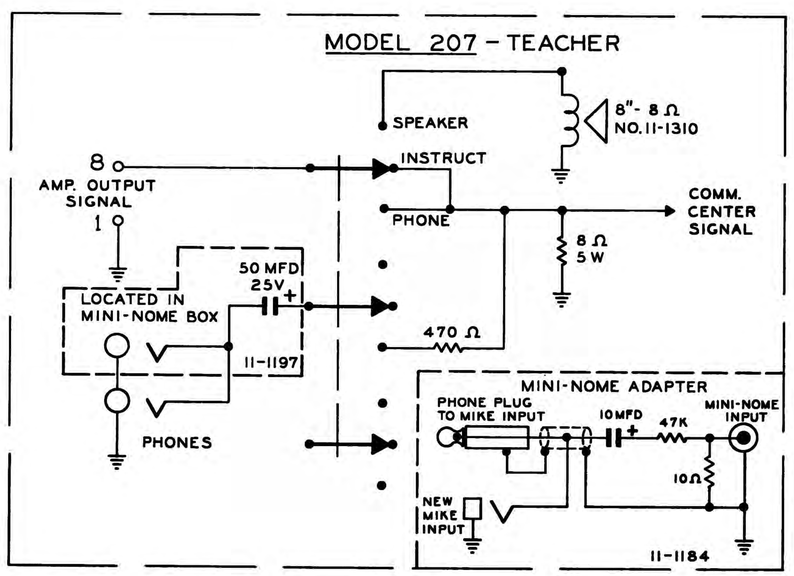

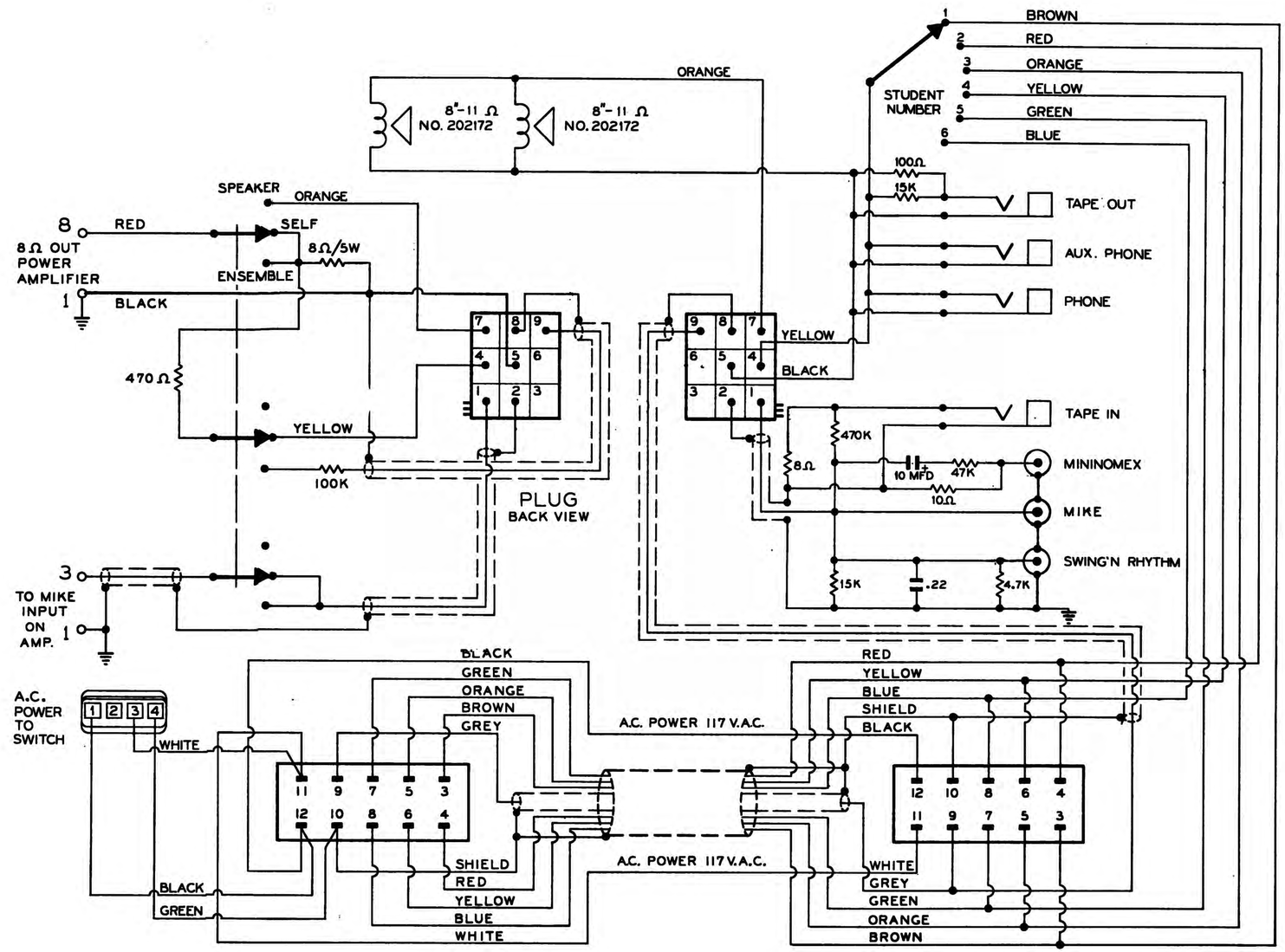

MODEL- ALL 200 SERIES PART NO.- 202821-S-1-E-5
TITLE- WIRING DIAGRAM - SPKR. SYSTEM
STARTING SERIAL NO.- DATE- 6-1-73
THE WURLITZER COMPANY - DEKALB DIVISION - DEKALB, ILL.

tropicalfishvintage.com

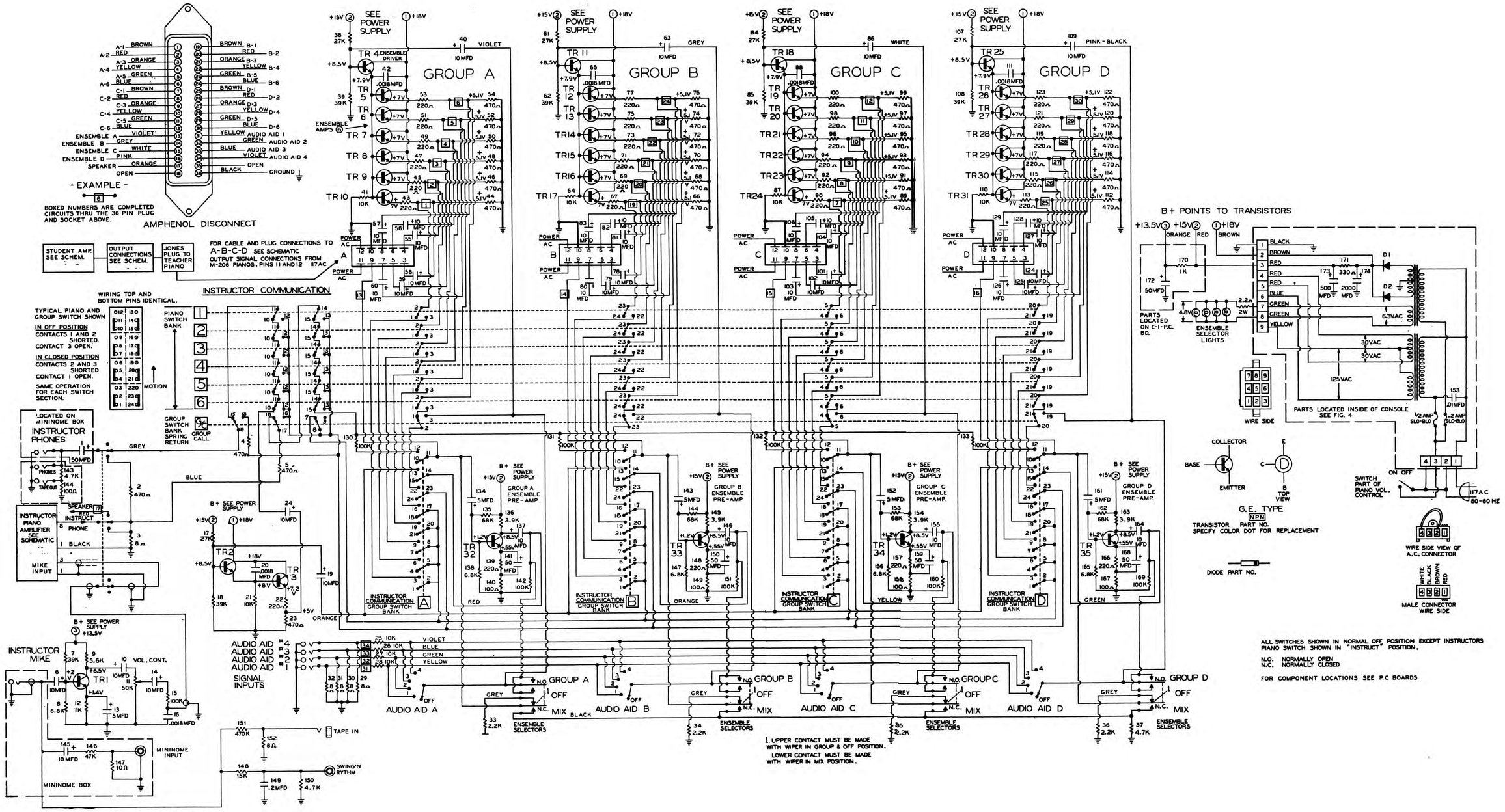

MODEL- 207 PART NO.- 202520-S-1-E-9
TITLE- COMMUNICATION CENTER SCHEM. COMPLETE SYSTEM
STARTING SERIAL NO.- DATE- 6-1-73
THE WURLITZER COMPANY - DEKALB DIVISION - DEKALB, ILL.

tropicalfishvintage.com

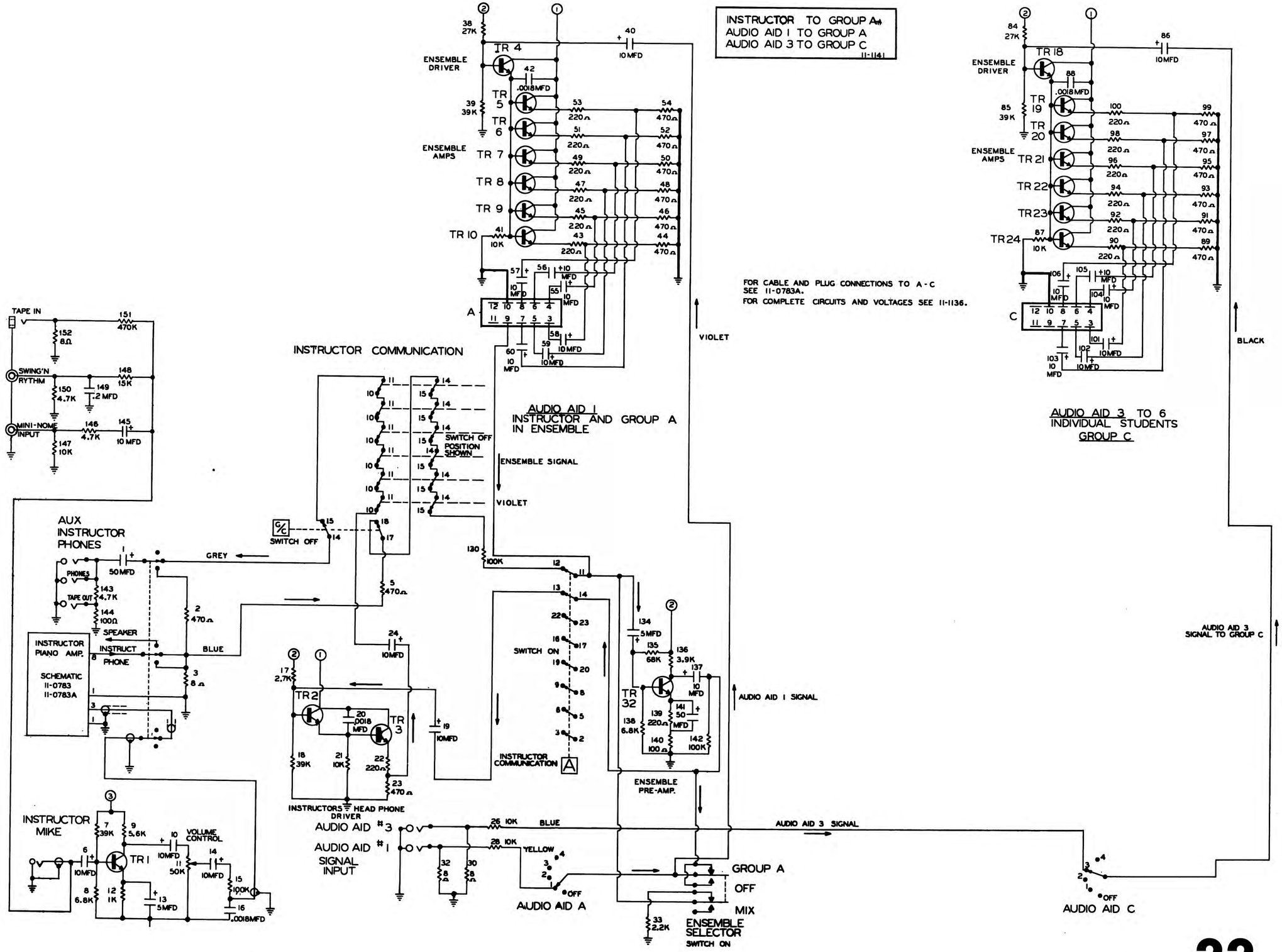

MODEL- 207 PART NO.- 202822-S-1-E-5
TITLE- COMMUNICATIONS CENTER SCHEM. OVERLAY
STARTING SERIAL NO.- DATE- 6-1-73
THE WURLITZER COMPANY - DEKALB DIVISION - DEKALB, ILL.

tropicalfishvintage.com

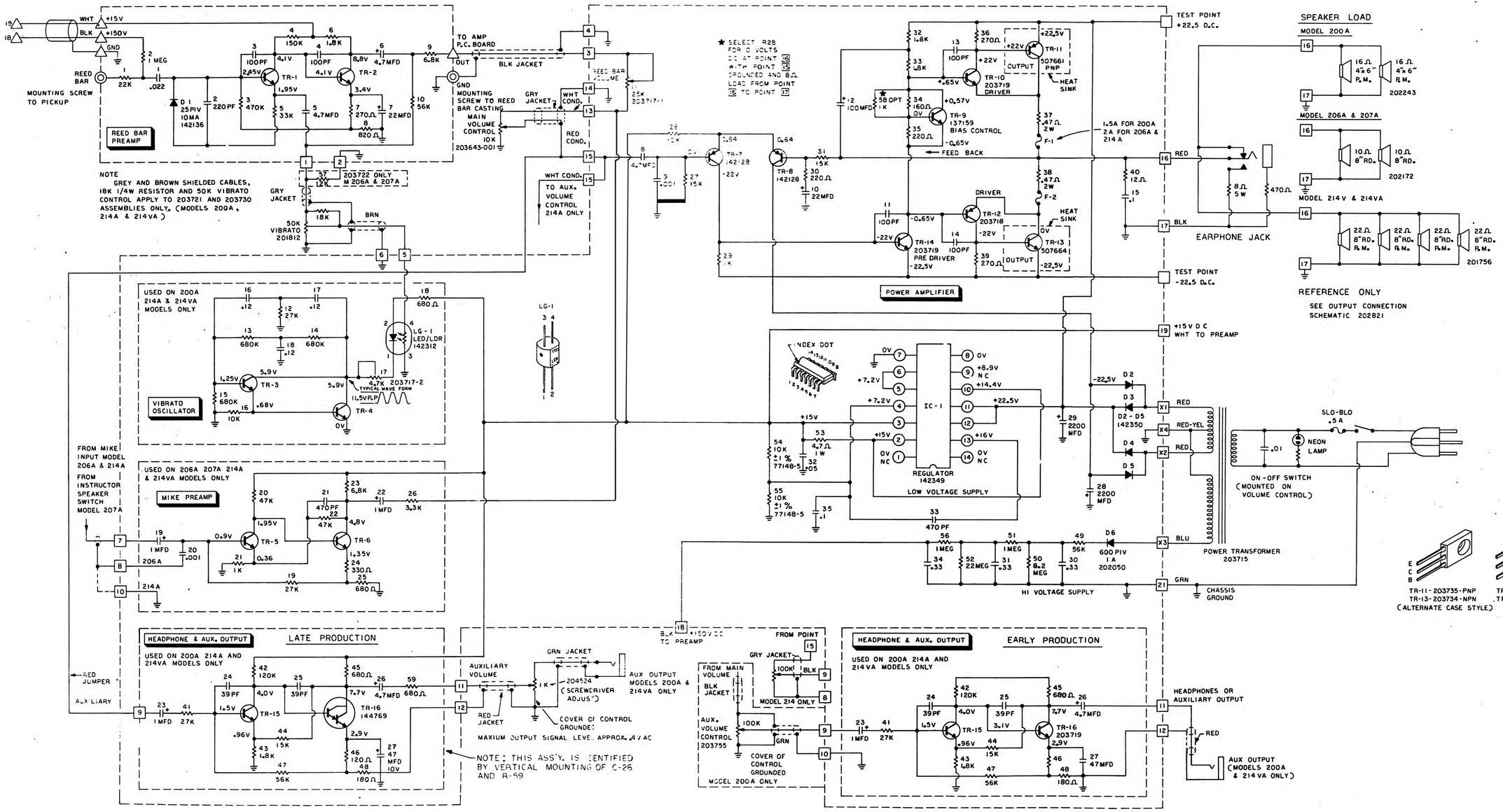

tropicalfishvintage.com

MODEL 200A

STARTING SERIAL NO. 102905
ASS'Y. NO. 203730-3

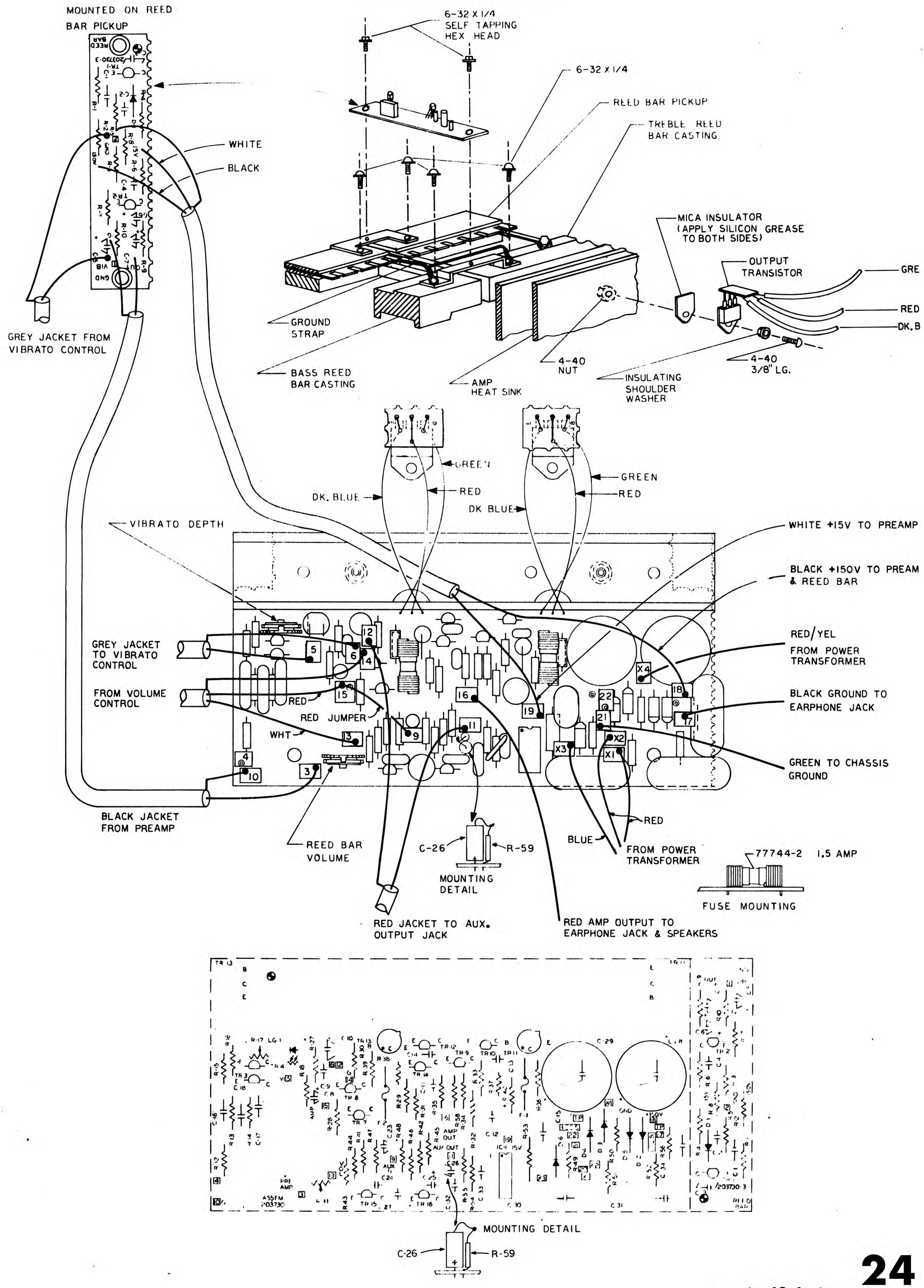

tropicalfishvintage.com

N O T E S

This document was digitized by Tropical Fish in order to assist in the restoration of vintage Wurlitzer electronic pianos.

More schematics & service manuals are available at tropicalfishvintage.com/schematics

Questions & comments: info@tropicalfishvintage.com