MODEL 700

WURLITZER ELECTRONIC PIANO
SERVICE MANUAL

DIAGRAMS & SCHEMATICS

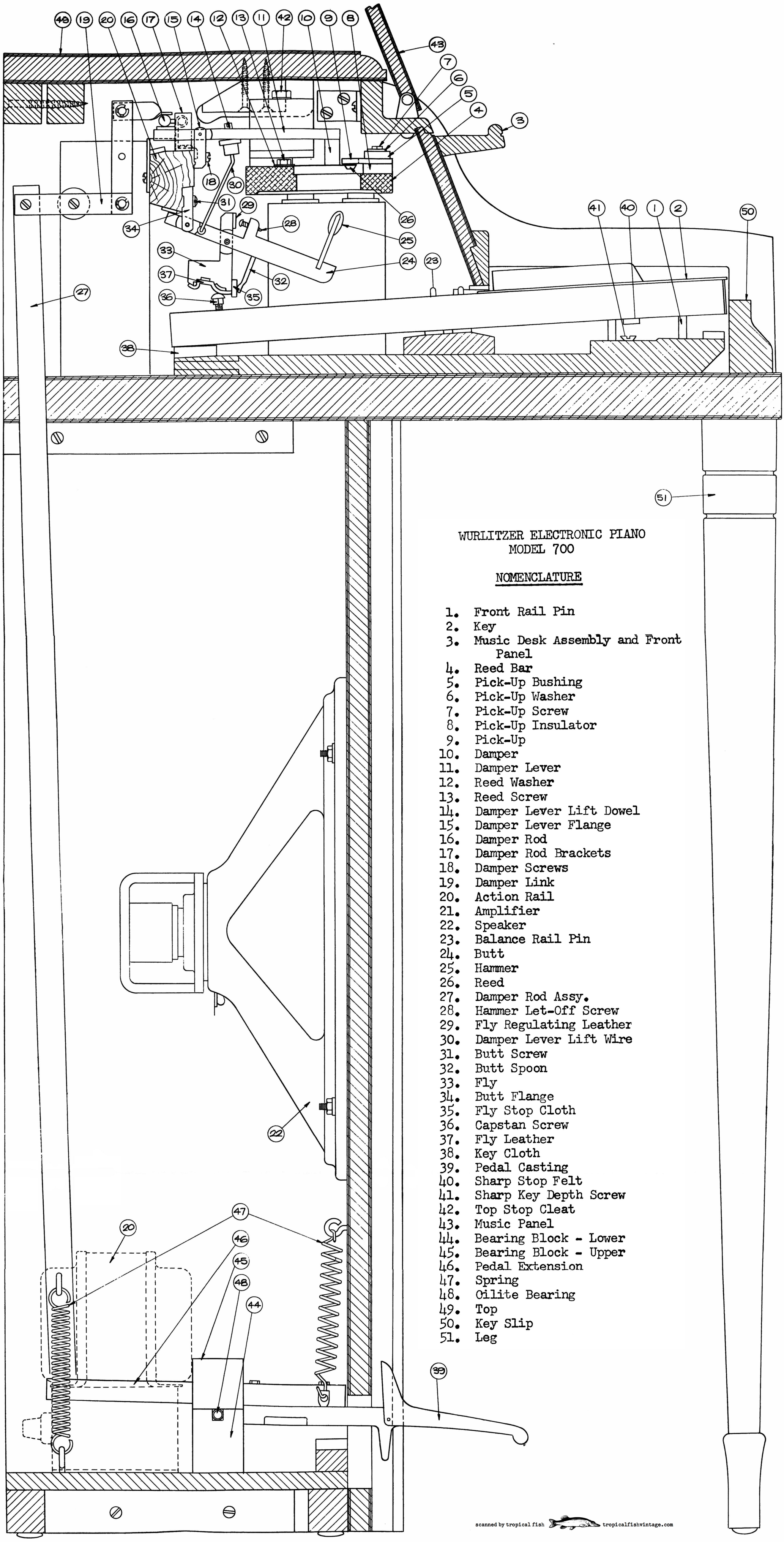

WURLITZER ELECTRONIC PIANO
MODEL 700

NOMENCLATURE

1. Front Rail Pin
2. Key
3. Music Desk Assembly and Front Panel
4. Reed Bar
5. Pick-Up Bushing
6. Pick-Up Washer
7. Pick-Up Screw
8. Pick-Up Insulator
9. Pick-Up
10. Damper
11. Damper Lever
12. Reed Washer
13. Reed Screw
14. Damper Lever Lift Dowel
15. Damper Lever Flange
16. Damper Rod
17. Damper Rod Brackets
18. Damper Screws
19. Damper Link
20. Action Rail
21. Amplifier
22. Speaker
23. Balance Rail Pin
24. Butt
25. Hammer
26. Reed
27. Damper Rod Assy.
28. Hammer Let-Off Screw
29. Fly Regulating Leather
30. Damper Lever Lift Wire
31. Butt Screw
32. Butt Spoon
33. Fly
34. Butt Flange
35. Fly Stop Cloth
36. Capstan Screw
37. Fly Leather
38. Key Cloth
39. Pedal Casting
40. Sharp Stop Felt
41. Sharp Key Depth Screw
42. Top Stop Cleat
43. Music Panel
44. Bearing Block - Lower
45. Bearing Block - Upper
46. Pedal Extension
47. Spring
48. Oilite Bearing
49. Top
50. Key Slip
51. Leg

scanned by tropical fish tropicalfishvintage.com

Fig. 700-N

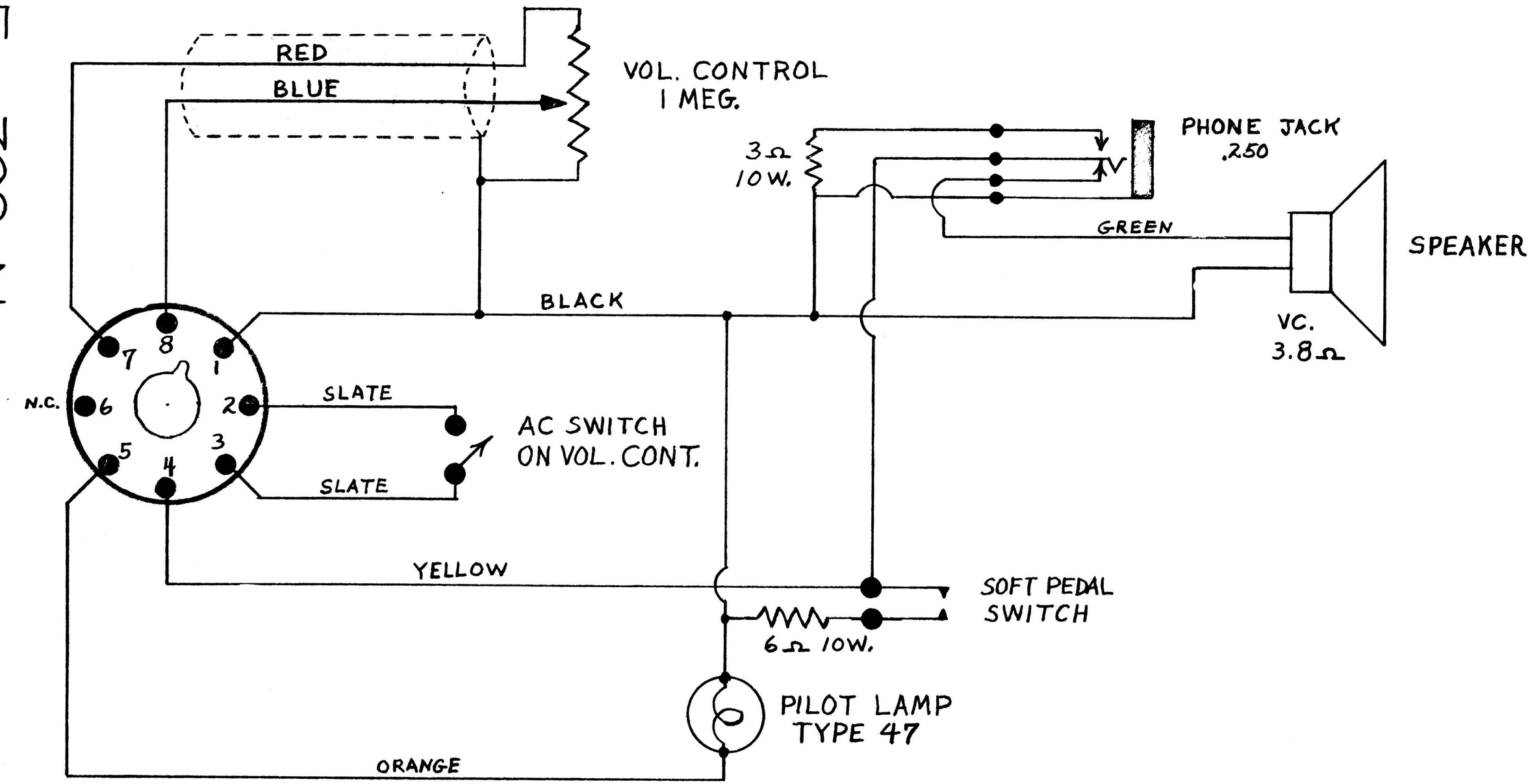

MODEL 700 CONTROL PANEL AND SPEAKER

scanned by tropical fish tropicalfishvintage.com

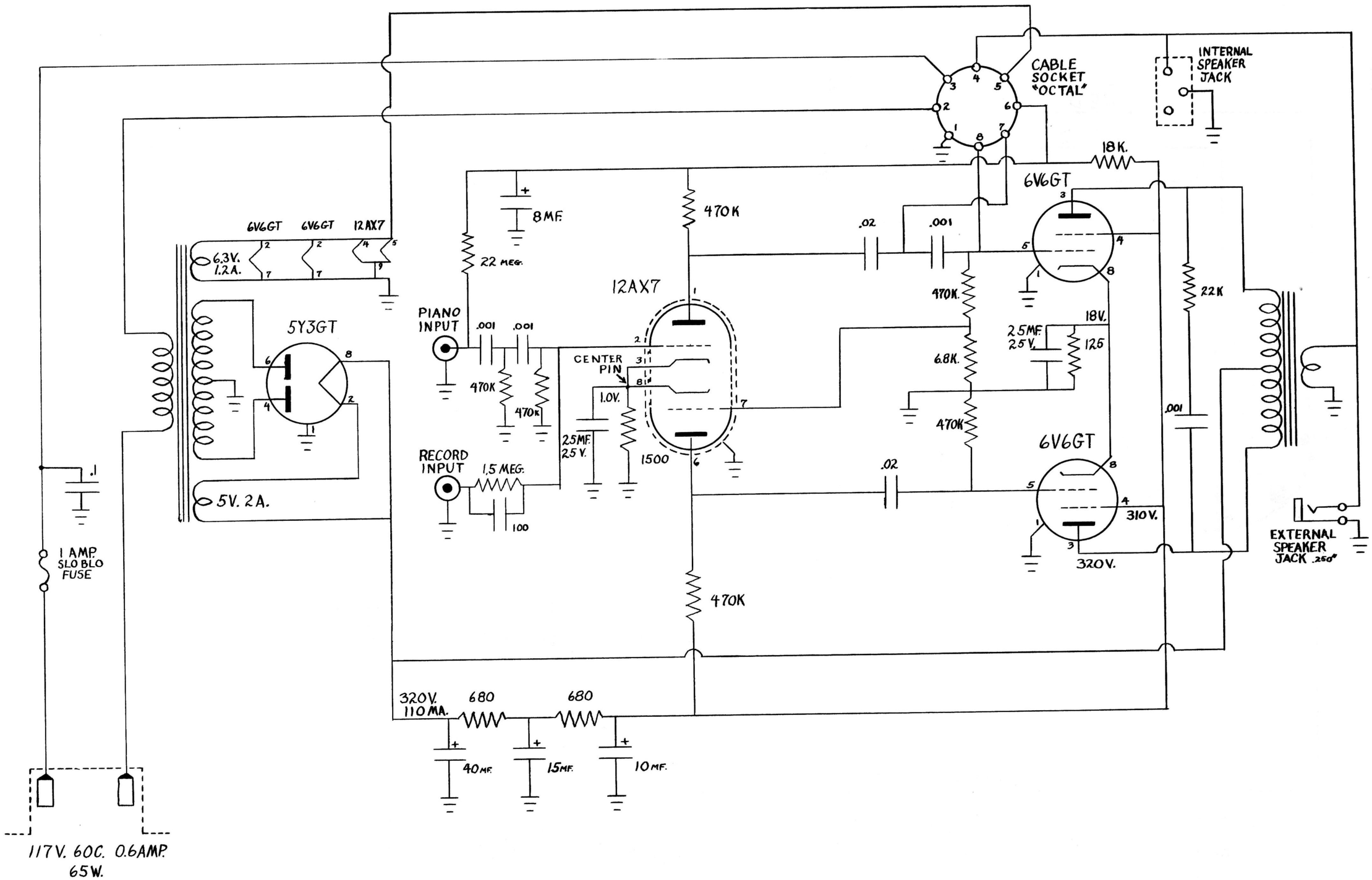

700-23

WURLITZER ELECTRONIC PIANO MODEL 700 AMPLIFIER EP-600-3

scanned by tropical fish tropicalfishvintage.com

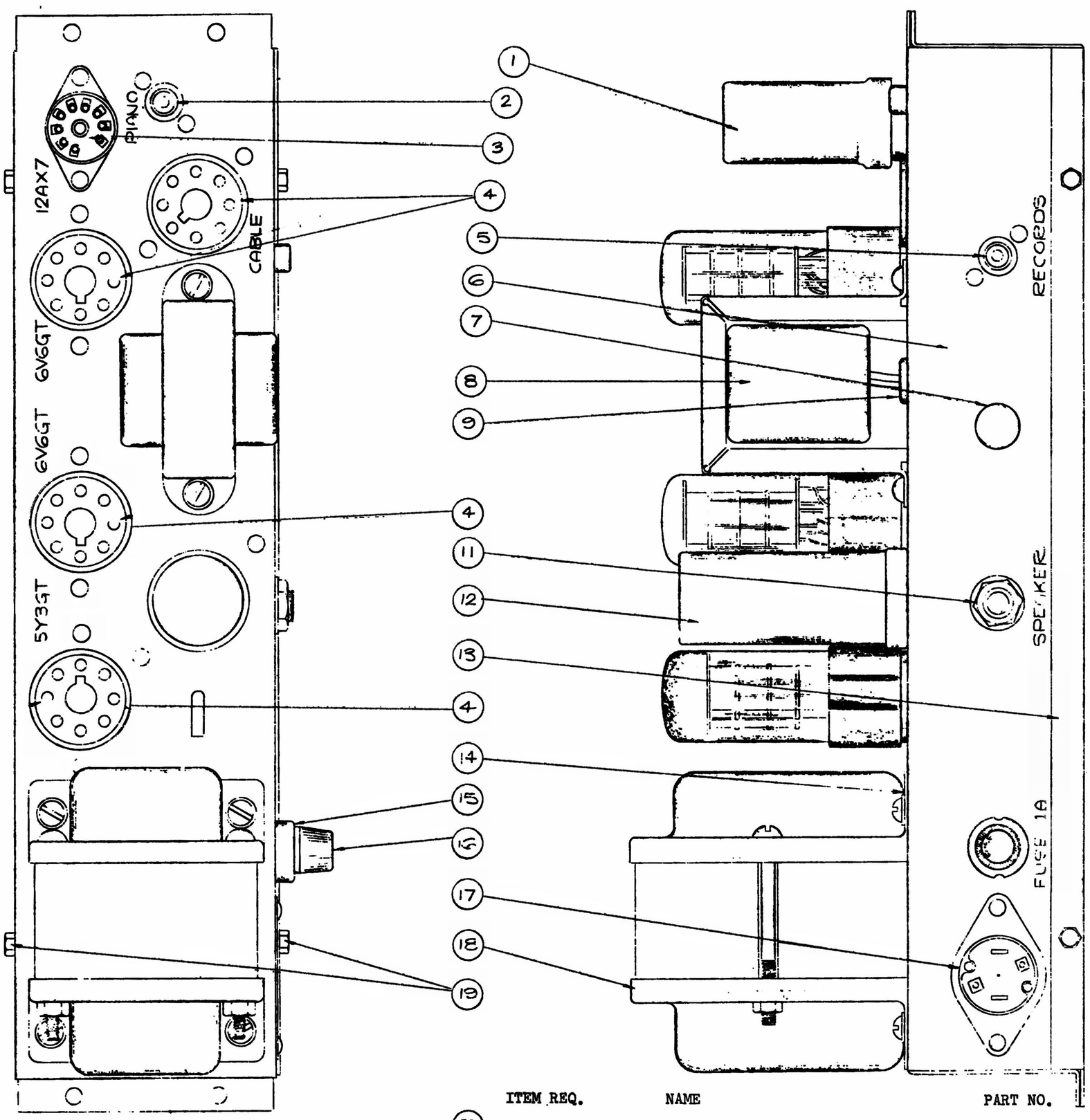

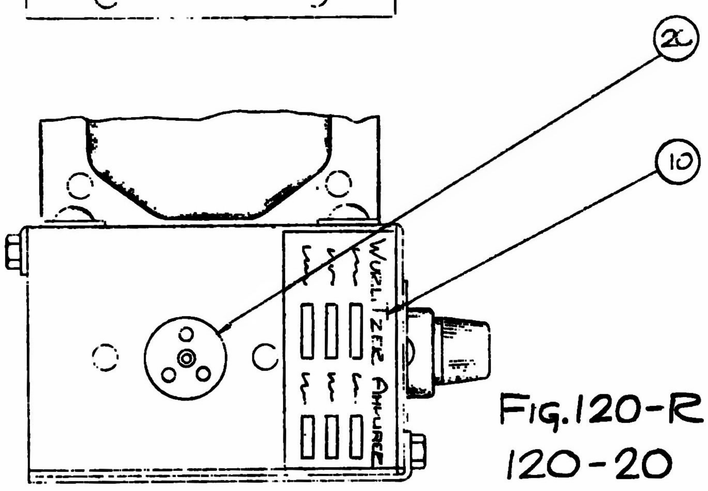

FIG. 120-R
120-20

ITEM	REQ.	NAME	PART NO.
1	1	TUBE COVER	EP-623a
2	1	PIANO JACK	EP-372a
3	1	NOVAL SOCKET	EP-614a
4	4	OCTAL SOCKET	EP-366a
5	1	RECORD JACK	EP-372a
6	1	CHASSIS TOP	EP-610c
7	1	HOLE PLUG	EP-633a
8	1	TRANSFORMER OUTPUT	EP-613c
9	1	GROMMET	EP-374a
10	1	SERIAL NO. PLATE	EP-615a
11	1	SPEAKER JACK	EP-369a
12	1	DRY ELECTROLYTIC 4 SECT.	EP-390a
13	1	CHASSIS BOTTOM	EP-611a
14	1	GROMMET	EP-377a
15	1	FUSE HOLDER	EP-378a
16	1	FUSE	EP-379a
17	1	A.C. LINE	EP-622a
18	1	TRANSFORMER POWER	EP-612c
19	4	1/4 #8 HEX HD. SHT. METAL SCR.	
20	1	SPEAKER SOCKET	EP-368a

scanned by tropical fish tropicalfishvintage.com